ELECTRONICS, INC.
44 FARRAND STREET
BLOOMFIELD, NJ 07003
(973) 748–5089
http://www.nteinc.com

RoHS
2002/95/EC

NTE966
Integrated Circuit
3–Terminal Positive Voltage Regulator, 12V

The NTE966 fixed–voltage regulator is a monolithic integrated circuit in a TO220 type package designed for use in a wide variety of applications including local, on–card regulation. This regulator employs internal current limiting, thermal shutdown, and safe–area compensation. With adequate heatsinking it can deliver output currents in excess of 1.0 ampere.

Features:

- Output Current in Excess of 1.0 Ampere
- No External Components Reguired
- Internal Thermal Overload Protection
- Internal Short–Circuit Current Limiting
- Output Transistor Safe–Area Compensation

Absolute Maximum Ratings: (T_A = +25°C unless otherwise specified)

Input Voltage, V_{in} 35Vdc
Power Dissipation (T_A = +25°C), P_D . . . . . Internally Limited
Derate above +25°C . . . . . 15.4mW/°C
Power Dissipation (T_C = +25°C), P_D . . . . . Internally Limited
Derate above +75°C . . . . . 200mW/°C
Thermal Resistance, Junction–to–Ambient, R_{thJA} . . . . . 65°C/W
Thermal Resistance, Junction–to–Case, R_{thJC} . . . . . 5°C/W
Operating Junction Temperature Range, T_J . . . . . –55° to +150°C
Storage Junction Temperature Range, T_{stg} . . . . . –65° to +150°C

Electrical Characteristics: (V_{in} = 19V, I_O = 500mA, T_J = 0° to +125°C unless otherwise specified)

Parameter	Symbol	Test Conditions		Min	Typ	Max	Unit
Output Voltage	V_O	T_J = +25°C		11.5	12.0	12.5	V
		5mA ≤ I_O ≤ 1A, P_O ≤ 15W, 14.5V ≤ V_{in} ≤ 27V		11.4	12.0	12.6	V
Line Regulation	Reg_{line}	T_J = +25°C, Note 1	14.5V ≤ V_{in} ≤ 20V	–	13	240	mV
			16V ≤ V_{in} ≤ 22V	–	6	120	mV
Load Regulation	Reg_{load}	T_J = +25°C, Note 1	5mA ≤ I_O ≤ 1.5A	–	45	160	mV
			250mA ≤ I_O ≤ 750mA	–	16	80	mV

Note 1. Load and line regulation are specified at constant junction temperature. Changes in V_O due to heating effects must be taken into account separately. Pulse testing with low duty cycle is used.

Electrical Characteristics (Cont'd): (V_{in} = 19V, I_O = 500mA, T_J = 0° to +125°C unless otherwise specified)

Parameter	Symbol	Test Conditions	Min	Typ	Max	Unit
Quiescent Current	I_B	T_J = +25°C	–	4.4	8.0	mA
Quiescent Current Change	ΔI_B	14.5V ≤ V_{in} ≤ 30V	–	–	1.0	mA
		5mA ≤ I_O ≤ 1A	–	–	0.5	mA
Ripple Rejection	RR	15V ≤ V_{in} ≤ 25V, f = 120Hz	–	60	–	dB
Dropout Voltage	$V_{in} - V_O$	T_J = +25°C, I_O = 1A	–	2	–	V
Output Noise Voltage	V_n	T_A = +25°C, 10Hz ≤ f ≤ 100kHz	–	10	–	$\mu V/V_O$
Output Resistance	r_O	f = 1kHz	–	18	–	mΩ
Short−Circuit Current Limit	I_{sc}	T_A = +25°C, V_{in} = 35V	–	0.2	–	A
Peak Output Current	I_{max}	T_J = +25°C	–	2.2	–	A
Average Temperature Coefficient of Output Voltage	TCV_O		–	−1.0	–	mV/°C

Application Information:

The NTE966 fixed−voltage regulator is designed with Thermal Overload Protection that shuts down the circuit when subjected to an excessive power overload condition, Internal Short−Circuit Protection that limits the maximum current the circuit will pass, and Output Transistor Safe−Area Compensation that reduces the output short−circuit current as the voltage across the pass transistor is increased.

In many low current applications, compensation capacitors are not required. However, it is recommended that the regulator input be bypassed with a capacitor if the regulator is connected to the power supply filter with long wire lengths, or if the output load capacitor is large. An input bypass capacitor should be selected to provide good high−frequency characteristics to insure stable operation under all load conditions. A 0.33μF or larger tantalum, mylar, or other capacitor having low internal impedance at high frequencies should be chosen. The bypass capacitor should be mounted with the shortest possible leads directly across the regulators input terminals. Normally good construction techniques should be used to minimize ground loops and lead resistance drops since the regulator has no external sense leads.

Current Regulator

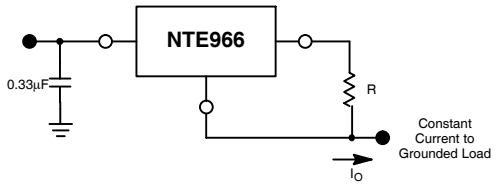

The NTE966 regulator can also be used as a current source when connected as above. Resistor R determines the current as follows:

$$I_O = \frac{5V}{R} + I_Q$$

$I_Q \cong$ 1.5mA over line and load changes

For example, a 1−ampere current source would require R to be a 5Ω, 10W resistor and the output voltage compliance would be the input voltage less 7 volts.

Adjustable Output Regulator

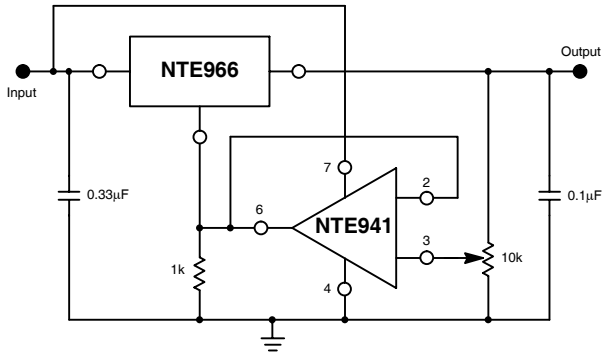

V_O, 7V to 20V
V_{IN} $V_O \geq$ 2V

The addition of an operational amplifier allows adjustment to higher or intermediate values while retaining regulation characteristics. The minimum voltage obtainable with this arrangement is 2 volts greater than the regulator voltage.

Current Boost Regulator

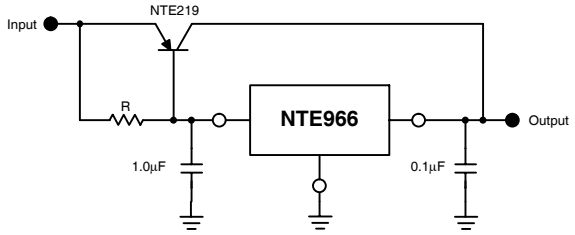

The NTE966 can be current bolosted with a PNP transistor. The NTE219 provides current to 5 amperes. Resistor R in conjunction with the V_{BE} of the PNP determines when the pass transistor begins conducting; this circuit is not short−circuit proof. Input−output differential voltage minimum is increased by V_{BE} of the pass transistor.

Short−Circuit Protection

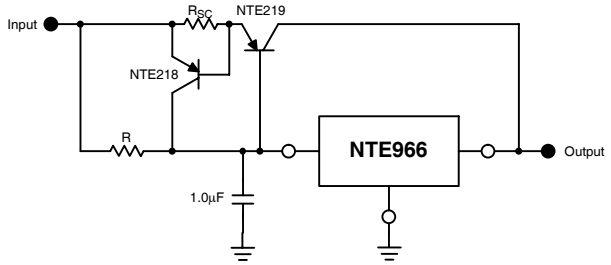

The “Current Boost Regulator” circuit can be modified to provide supply protection against shout circuits by adding a short−circuit sense resistor, R_{SC}, and an additional PNP transistor. The current sensing PNP must be able to handle the short−circuit current of the three−ternimal regulator. Therefor, a four−ampere plastic power transistor is specified.