Altech by elsspelsberg

Standard Features

- **Protection Level:** IP66
- **Technical:** Smooth Sidewalls
- **Enclosure Material:** Cast Aluminum, Al Si 12
- **Gasket Material:** Polyurethane
- **Temperature Range:** -35°C to 80°C (-31°F to 176°F)
- **Color:** Silver Gray, RAL 7001
- **Accessories:** See section below

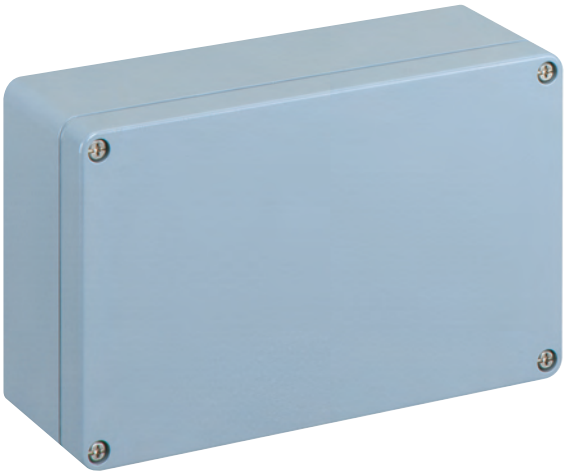

Aluminum

Ordering Information	Cat. No.	Type	Dimensions mm (in) Length	Width	Height	Std. Pk.
Enclosure	150-012	AL 2616-9	260 mm (10.24 in)	160 mm (6.30 in)	90 mm (3.54 in)	1

Accessories

Ordering Information	Cat. No.	Type	Std. Pk.
Mounting Plate	155-012	ALMPS-2616	1
Hinge Kit Set	154-210	HK-AL	1
DIN Rail TS 35 - 35 x 245mm	162-012	TS35/245	1
Mounting Tab Kit - large	154-006	MT-AL2	1
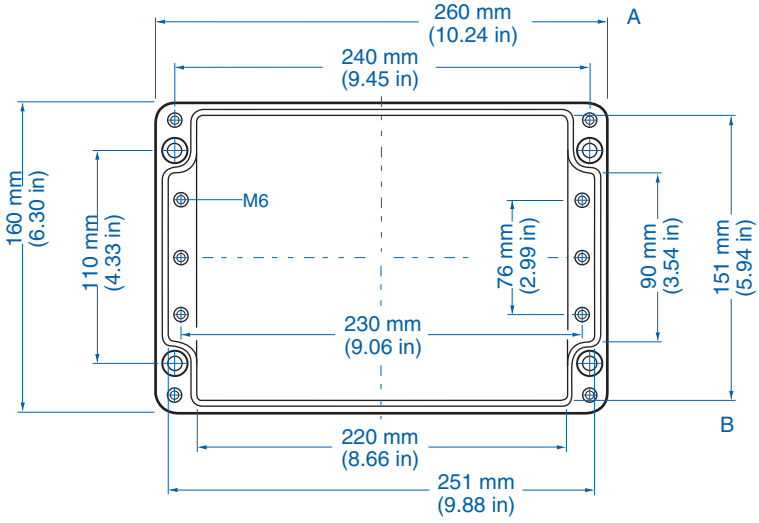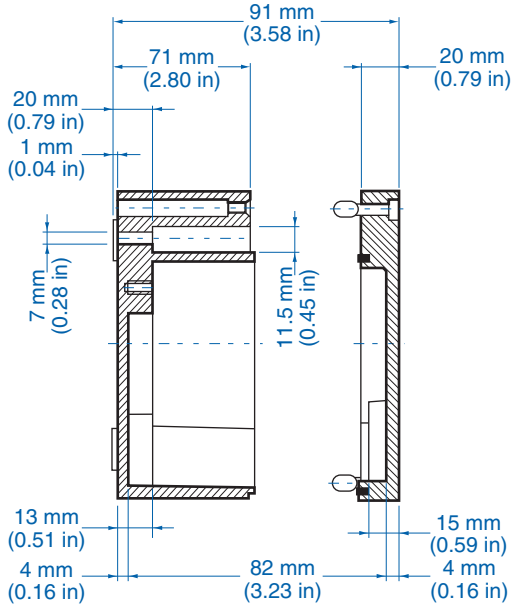
Please refer to pages 149-152 for additional accessories and detailed information.