used for: D-SUB

AT ALL TIMES WATER RESISTANT CONNECTORS NOT IN USE SHOULD BE COVERED WITH A CONEC WATER RESISTANT CAP OR WATER TIGHT HOOD.

POS.	A $^{+0.2}$	B $^{+0.2}$	C	D $^{+0.25}$	E $_{-0.30}$	Part-NO.
9	21.1	39.4	25.00 $^{+0.12}_{-0.13}$	16.79	5.82	**6STD09PCM99B30X**
15	21.1	47.7	33.30 $^{+0.15}_{-0.1}$	25.12	5.82	**6STD15PCM99B30X**
25	21.1	61.4	47.04 ±0.13	38.84	5.69	**6STD25PCM99B30X**
37	21.1	77.9	63.50 ±0.13	55.30	5.69	**6STD37PCM99B30X**

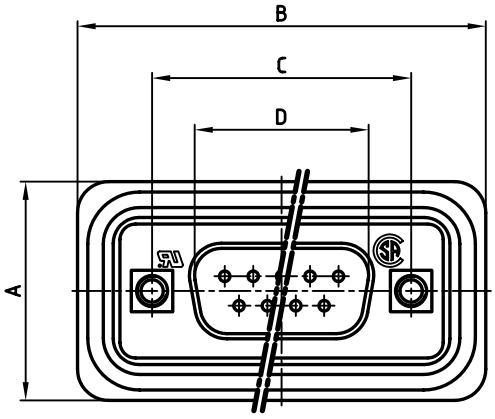

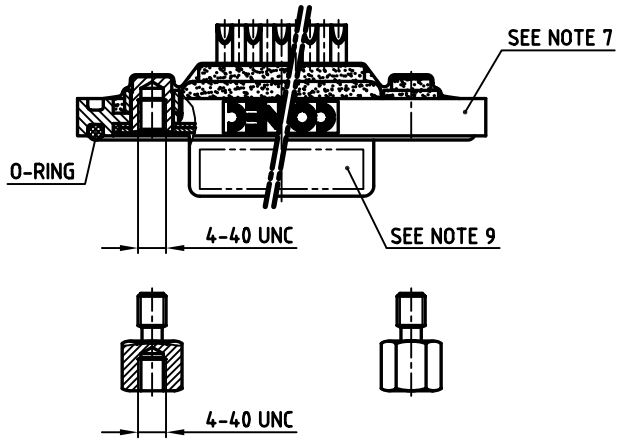

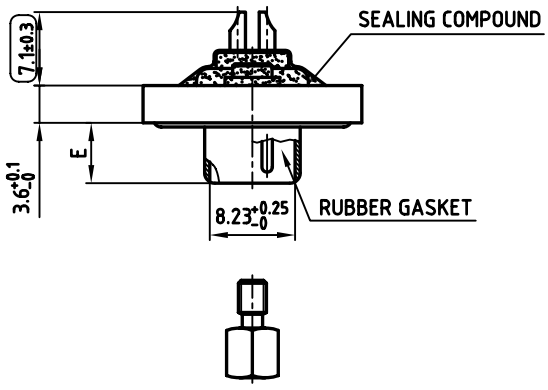

NOTES:

1. METALSHELLS: COPPER ALLOY; min. 320µ" TIN
2. INSULATORS: PBT GF UL 94 V-0, BLACK
3. CONTACTS: COPPER ALLOY
   PLATING: 30µ" HARD GOLD OVER min. 50µ" NICKEL
   SOLDER CUP ACCEPTS CABLE AWG 20
4. THREADED INSERT: COPPER ALLOY; min. 200µ" TIN over 80µ" NICKEL
5. COLLAR: COPPER ALLOY; min. 200µ" TIN over 80µ" NICKEL
6. HEXLOCKING SCREW: STAINLESS STEEL
7. FRAME: ZINC DIECAST; NICKEL PLATED
8. MAXIMUM TORQUE VALUE FOR THREAD: 6" LBS
9. CONNECTOR IS PART MARKED: PART-NO. CONEC ABC
10. ( ) = CHECK DIMENSION

Directive 2002/95/EC „RoHS" Compliant

APPROVAL # FREIGABE # DEBLOCAGE # AUTORIZACION # APPROVAL

CUSTOMER APPROVAL DATE:

NAME: TITLE:

COMPANY NAME:

APPROVAL # FREIGABE # DEBLOCAGE # AUTORIZACION # APPROVAL

THIS DRAWING MAY NOT BE COPIED OR REPRODUCED IN ANY WAY, AND MAY NOT BE PASSED ON TO A THIRD PARTY WITHOUT WRITTEN PERMISSION. OWNERSHIP AND COPYRIGHT OF CONEC GmbH

DO NOT ALTER CAD DRAWING BY HAND

rev.	description	date	name

tolerance

dim. in mm

2005	date	name
drawn	25.07.	Lehmenkühler
appd.	25.07.	Mickenbecker
norm	DIN 41652	
d-old		

CONEC®

scale: 2:1

material: SEE NOTES

title:

D-SUB MALE

9-37pos. SOLDER CUP

with threaded insert and hexlocking screw

dwg no: AutoCAD 2004 DIN-A 3

18K1A372 sh: 1/1

part no: SEE TABLE