ITEM NO.	PART NUMBER	DESCRIPTION	QTY.	COMPONENT NOTES
1	50-00024	Connector, dc plug, 5.5x2.1xL23 mm, molding style, spring contacts	1	
2	50-00025	Connector, dc jack, 5.5x2.1xL17.4 mm, molding style	1	
3	30-00007	Wire, 2C BC, 18 AWG, UL2468, 300V, 80C, 4.4 mm, VW-1, PVC, 87A	1	
4	24-00003	Overmold, PVC	1	black
5	24-00004	Overmold, PVC	1	black

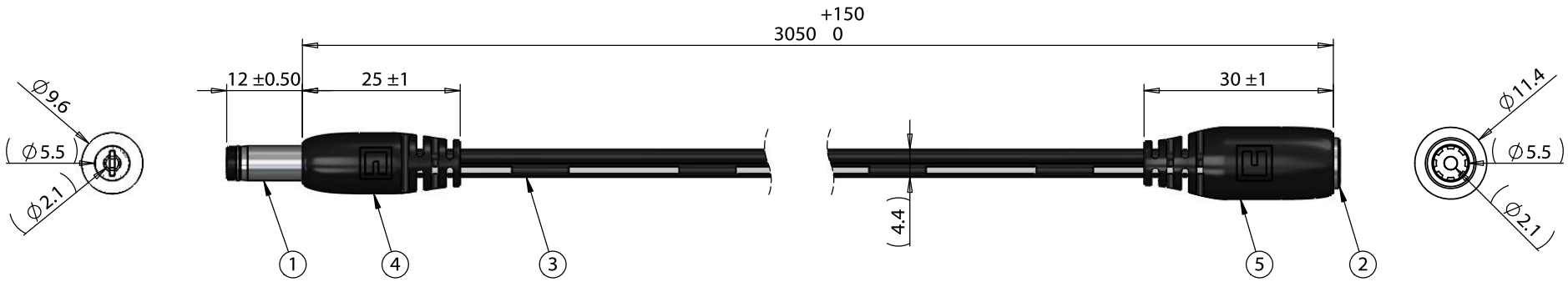

Wiring Diagram		
50-00024	wire color	50-00025
center	black with stripe	center
sleeve	black	sleeve

Notes:
Functionally equivalent components may be substituted

Revision:	Date:	Description:
A	11/22/2016	Initial release

Prepared: AG Digitally signed by AG Date: 2018.01.25 09:54:21 -08'00'

Verified: AW Digitally signed by AW Date: 2018.01.25 14:54:35 -08'00'

Dimensions are in millimeters.
Tolerances:
X: ± 0.5 mm
X.X: ± 0.3 mm
X.XX: ± 0.05 mm

Notes:

RoHS compliant

Function test: no open, no short circuit, no intermittent

Description:

Cable, 3050 mm, 5.5x2.1x12 mm 50-00024 dc plug to 5.5x2.1 mm 50-00025 dc jack, 18 AWG, 30-00007 wire

TENSILITY
tel 1.541.323.3228 800 877.670.7118
fax 1.541.323.4202 web tensility.com

Size: A
Part number: 10-02385
Scale: 1:1
Sheet 1 of 1

5 4 3 2 1