life.augmented

Products and solutions for Smart Industry

Contents

4 Introduction

5 Applications
5 PLC and industrial IOs
8 IO-Link technology
10 Condition monitoring and Predictive maintenance
13 Industrial safety
15 Artificial intelligence

19 Products
20 Motor drivers and gate drivers
28 SiC and GaN gate drivers
29 STM32 Ecosystem for Motor Control
30 IGBTs, power MOSFETs and SiC MOSFETs
34 Power modules
35 Diodes and SiC rectifiers
36 Thyristors and AC switches
39 Power management ICs
45 ESD and EMI protections
49 Proximity sensor protection

50 MPUs and MCUs
52 STM32 Nucleo development boards
54 STM8 8-bit MCU family
54 Safety-certified systems based on STM8 and STM32
55 STM32 for wireless connectivity
58 STM32 Trust
60 RTCs, Reset, Supervisors and Watchdog ICs
61 Serial EEPROM
62 Signal conditioning ICs
64 Analog and Digital input ICs
66 Digital output with Intelligent Power Switches
69 Motion sensors
70 Environmental sensors
70 Evaluation boards for sensors
72 IO-Link
74 Wireless communication
76 SUB-1GHZ
78 Contactless

Introduction

To help developers meet the challenges they face in the Smart Industry world, this document summarizes ST's portfolio, providing a reference for today's main applications that will enable you to better focus on your design solutions.

Thanks to their inherent features, our devices are intended to make applications easier to develop. The solutions that we showcase in this document are an important link between our devices and your applications.

Our solutions, usually referred to as reference designs, evaluation boards, software or development tools, are always linked to at least one of our products. To make it easier for developers to use our ICs, at least one development tool is associated to each of our products. This guide first lists the type of application, followed by the related solutions and products.

Main applications addressed today:

- Programmable logic controllers (PLC) and industrial IOs
- IO-Link technology
- Condition monitoring and Predictive maintenance
- Industrial safety
- Artificial intelligence

For instance, someone looking to design a typical industrial sensor application (i.e. pressure or temperature monitoring solution) will find their target application mentioned many times as the industrial sensor itself, or with IO-Link communication or in the wider perspective of a predictive maintenance implementation. This redundancy gives more information to the reader, but for a focused search, dedicated product paragraphs are also helpful.

The following sections focus on these applications and often include an example solution to help you get started.

Developers will also find information on the best ICs to be used regardless of the smart industry sub application, as well as a description of related solutions.

Applications

PLC AND INDUSTRIAL IOS

The most representative device in any factory automation environment, the PLC (Programmable Logic Controller) is a good indicator of the technological evolution in this field, resulting today in the Industry 4.0 era.

The link between PLCs and industrial IOs is clear as the latter are often a sub-unit of a PLC or exist as stand-alone industrial remote IO modules; in this case a backplane interface to the PLC is usually provided. Here we will discuss the second case where industrial IOs are connected to the PLC through a backplane interface.

Blocks in gray are included for the sake of completeness, but they are not part of ST's portfolio.

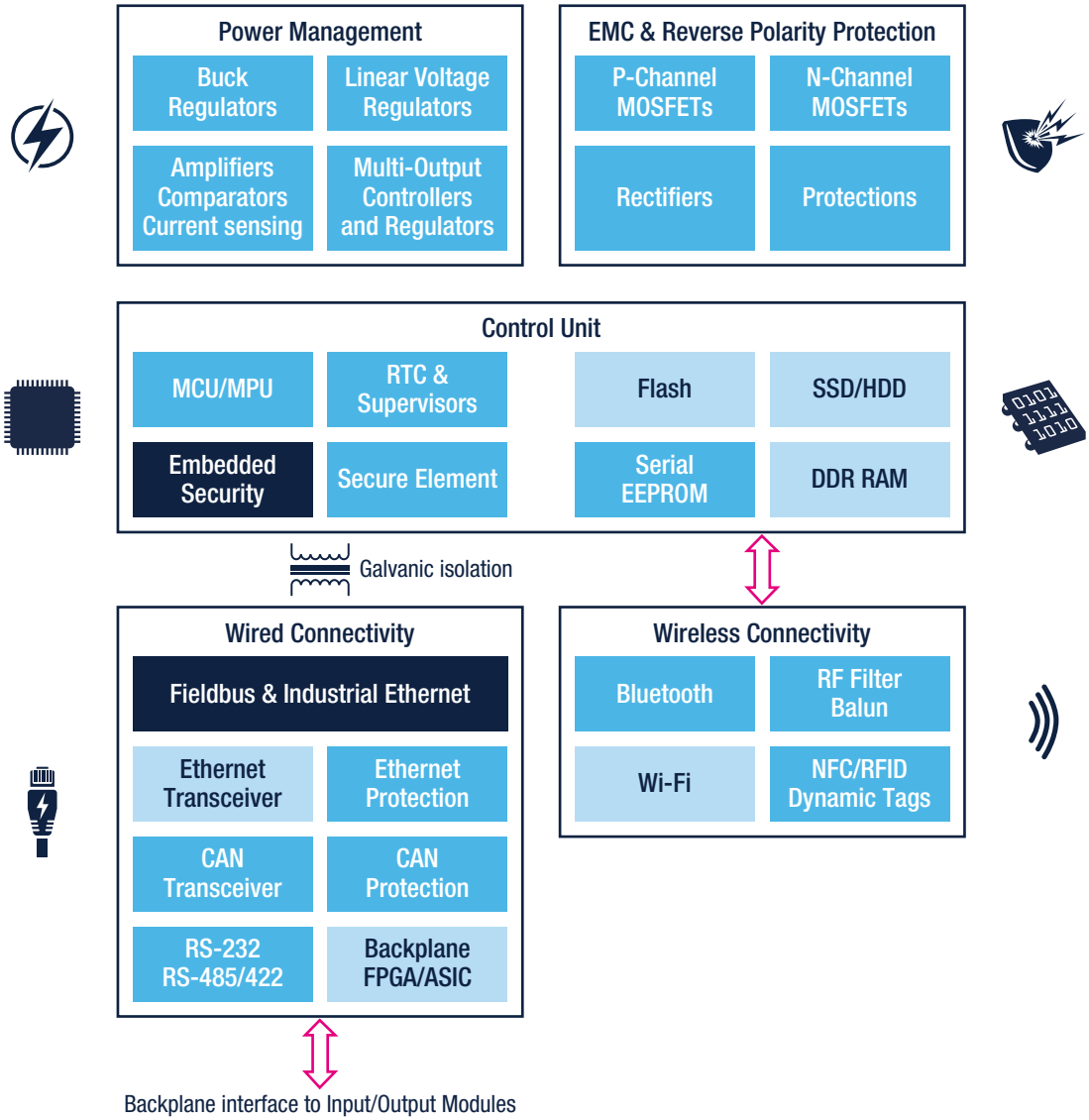

The table below lists a selection of ST's products for PLCs. For a complete list and smart search engine, visit www.st.com. In some cases (i.e. certain Serial EEPROM part numbers), the "*" indicates a family of products where it is possible to find ICs for the Automotive segment.

	Buck Regulators	Linear Voltage regulators	Amplifiers, Comparators, Current sensing	Multi-Output Controllers and Regulators
Power Management	L49*, L59*, L69*, L79*, L7987*, ST1S*	LD*9, LDK*, LDL*, L78*, LD1*, LM2*, LM3*	LM*, LMV*, TS27*, TSV*, TSX*, TSZ*, LM2*, LM3*, TS3*, TS922*, TS98*, TSC201*	PM6641, STPMIC02
	P-Channel MOSFETs	**N-Channel MOSFETs**	**Rectifiers**	**Protections**
EMC & Reverse Polarity Protection	STD10P*, STL*, STN3P*	STB*, STD1*, STD2*, STD3*, STD6*, STL*, STN*, STP*, STS*	STPS*, FERD*	STEF01, SMB15*, SM15*, SM6T*, SMA6F*, SMB6F*, SMC30J*, SMCJ*, ESDA*, SPT01-335DEE, STIEC45*
	MCU/MPU	**RTC & Supervisors**	**Secure Element**	**Serial EEPROM**
Control Unit	STM32MP1 Series STM32H7 Series	M48T*, M41T*, STM6*, STM7*, STM8*, STWD100	STSAFE-J, STSAFE-TPM	M24*, M93* M95*
	Intelligent Power Switches	**Signal isolator**		
Galvanic Isolation	ISO8200AQ, ISO8200B, ISO8200BQ	STISO621		
	Ethernet Protection	**CAN Transceiver**	**CAN Protection**	**RS-232, RS-485/422**
Wired Connectivity	HSP051-4*10, HSP061-4M10, SLVU2.8	L9615	ESDCAN*	ST202*, ST232*, ST324*, ST3485*, ST485*
	Bluetooth		**NFC/RFID Dynamic Tags**	**RF Filter Balun**
Wireless Connectivity	BlueNRG*, STM32WB3*, STM32WB5*		M24LR*, M24SR*, ST25DV*	BAL-*, BALF-*, BALF-NR*

The figure below is a typical block diagram of a remote industrial IO module.

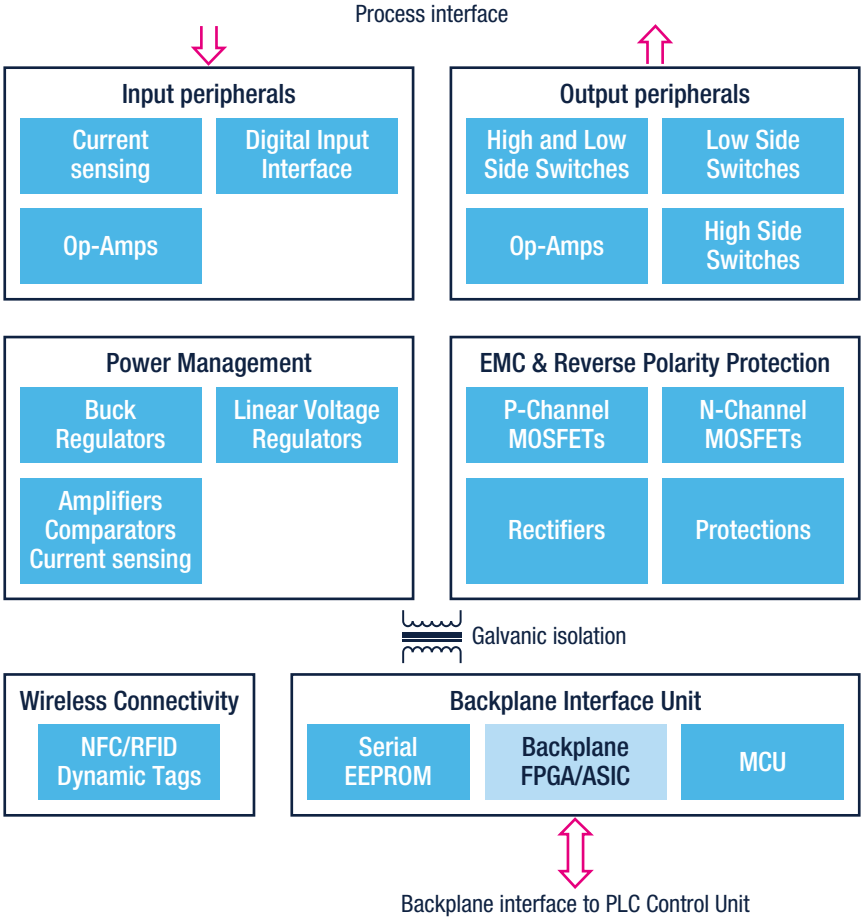

The table below lists a selection of ST's products for Industrial IOs.

	Current Sensing	Digital Input Interface	Op-Amps	
Input peripherals	TSC201*	CLT01-38S*, CLT03-2Q3, CLT3-4B, PCLT-2A, SCLT3-8B*	TS27*, TS27M2* from 10 to 36V new series TSB719*	
	High- and Low-Side Switches	**Low-Side**	**High-Side**	**Op-Amps**
Output peripherals	TDE170*	IPS4260L	VNI2140J, VNI4140K*, VNI8200XP*	TSX63*, TSX92*
	Buck Regulators	**Linear Voltage regulators**	**Amplifiers, Comparators, Current sensing**	
Power Management	L597*, L598*, L698*, L798*	LD108*, LD29*, LD390*, LM21*, LM31*	LM2*, TS91*, TS92*, TS72*, TS88*, TSC201*	
	P-Channel MOSFETs	**N-Channel MOSFETs**	**Rectifiers**	**Protections**
EMC & Reverse Polarity Protection	STD10P*, STL*, STN3P*	STISO621	STPS*, FERD*	STEF01, SMB15*, SM15*, SM6T*, SMB6F*, SMC30J*, SMCJ*, ESDA*, SPT01-335DEE, STIEC45*
	NFC/RFID Dynamic Tags			
Wireless Connectivity	ST25DV*			
	Serial EEPROM	**MCU**		
Backplane Interface Unit	M24C*, M95*	STM32F0*, STM32F1*, STM32F2*, STM32F4*, STM32G0*, STM32G4*		

Main evaluation boards and reference designs

X-NUCLEO-PLC01A1

Industrial input/output expansion board based on VNI8200XP and CLT01-38SQ7 for STM32 Nucleo

X-NUCLEO-OUT02A1

Industrial digital output expansion board based on ISO8200AQ for STM32 Nucleo

STEVAL-IFP029V1

Industrial digital output expansion board based on ISO8200AQ for STM32 Nucleo

STEVAL-IFP030V1

Industrial digital output expansion board based on ISO8200AQ for STM32 Nucleo

STEVAL-PLC001V1

(available in Q2-2021)

Industrial digital output expansion board based on ISO8200AQ for STM32 Nucleo

IO-Link TECHNOLOGY

IO-Link communication networks (IEC 61131-9) enable bi-directional, **point-to-point data connectivity down to the actuator and sensor level**, managing data pre-processing, sensor parameter tuning and advanced diagnostics.

IO-Link offers several key advantages including:

- Reduced commissioning and set-up time by storing key parameters
- Compatibility with existing cabling and connectors
- Interoperability across different manufacturers based on a common standard

We offer a range of ICs including IO-Link transceivers, STM32 microcontrollers, environmental and motion sensors, interfaces as well as protection devices to help meet IEC 61000 requirements for electro-static discharge (ESD), burst and surge immunity together with a set of hardware and software evaluation tools to help implement efficient IO-Link solutions.

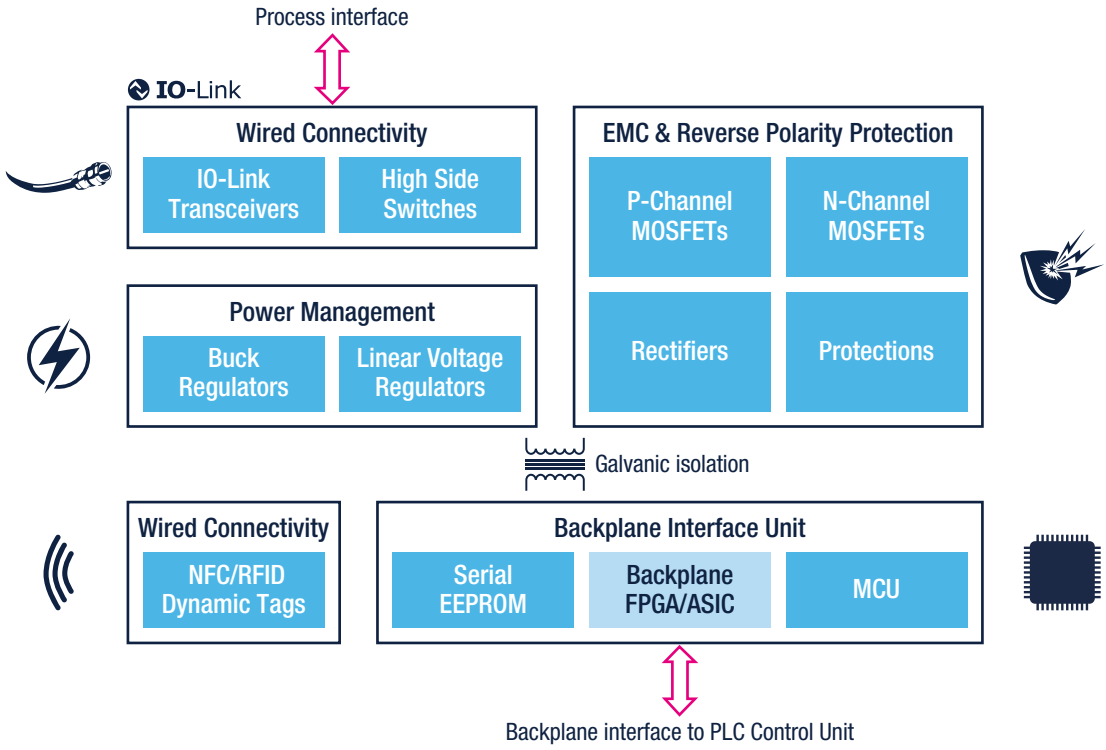

This table lists ST's products for IO-Link solutions. In some cases (i.e. certain Serial EEPROM part numbers), the "*" indicates a family of products where it is possible to find ICs for the Automotive segment.

	IO-Link transceivers				**High-side switches**
Wired connectivity	L6360 , L6362A, L6364				VNI2140J, VNI4140K*, VNI8200XP*
		NFC/RFID Dynamic Tags			
Wireless connectivity		M24LR*, M24SR*, ST25DV*			
	MCUs		**Serial EEPROM**		
Backplane interface unit	STM32F0 Series, STM32F1 Series, STM32F2 Series, STM32F4 Series, STM32G0 Series, STM32G4 Series		M24*, M93*, M95*		
		Linear Voltage Regulators	**Buck Regulators**		
Power management		LD*9, LDK*, LDL*, L78*, LD1*, LM2*, LM3*	L49*, L59*, L69*, L79*, L7987*, ST1S*		
	P-Channel MOSFETs	**N-Channel MOSFETs**	**Rectifiers**	**Protections**	
EMC & Reverse Polarity Protection	STD10P*, STL*, STN3P*	STB*, STD1*, STD2*, STD3*, STD6*, STL*, STN*, STP*, STS*	STPS*, FERD*	STEF01, SMB15*, SM15*, SM6T*, SMA6F*, SMB6F*, SMC30J*, SMCJ*, ESDA*, SPT01-335DEE, STIEC45*	

Main application boards and reference designs for solutions using IO-Link technology

STEVAL-IDP004V2

IO-Link master multi-port evaluation board based on L6360

P-NUCLEO-IOM01M1

STM32 Nucleo pack for IO-Link master with IO-Link v1.1 PHY and stack

STEVAL-IOM001V1

IO-Link master evaluation board based on L6360 equipped with ST morpho connectors for STM32 Nucleo

STEVAL-IDP003V1

IO-Link industrial modular sensor board based on L6362A

X-NUCLEO-IOD02A1

Dual channel IO-Link device expansion board based on L6364Q for STM32 Nucleo

P-NUCLEO-IOD01A1

STM32 Nucleo pack for IO-Link device fully compatible with IO-Link v1.1 (PHY and stack)

STEVAL-IOD003V1

IO-Link (PHY) device evaluation board based on L6362A with Arduino connectors for STM32 Nucleo

CONDITION MONITORING AND PREDICTIVE MAINTENANCE

High-value, cost-competitive industrial sensors (industrial 10-years longevity plan), a wide and flexible range of STM32 microcontrollers and a complete set of wired and wireless connectivity options enable smart sensor nodes for **Edge processing** and remote monitoring via enterprise cloud solutions.

ST is committed to **predictive maintenance** and has developed several solutions from edge processing to the cloud computing, providing a complete user experience. Users can connect up to 5 sensor nodes based on ST solutions to an AWS powered **Cloud dashboard** hosted on ST website.

A high-level architecture diagram is illustrated in this block diagram.

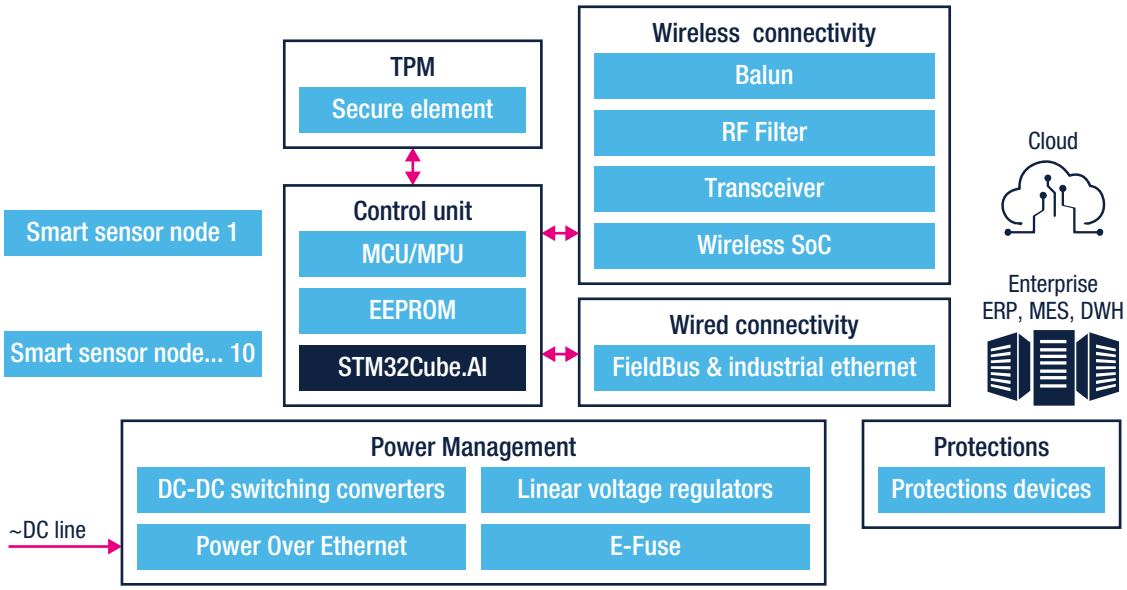

The smart sensor node and the gateway are the two main blocks used in this solution.

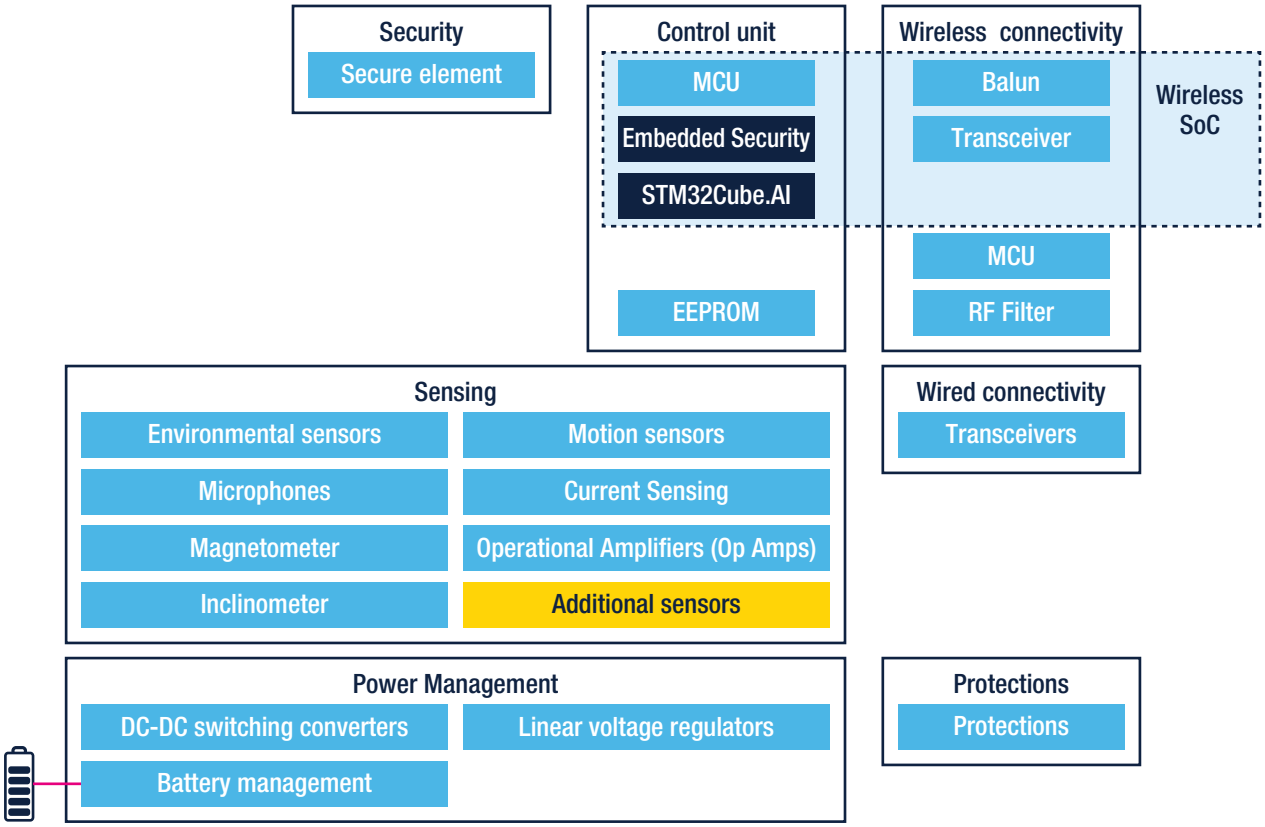

The following table summarizes the products in the smart sensor node.

	Transceivers				
Wired connectivity	IO-Link Device: L6362A, L6364 RS-232 RS-485/422: ST202*, ST232*, ST324*, ST3485*, ST485*				
	Balun	**Transceiver**	**RF Filter**	**Wireless SoC**	**NFC**
Wireless connectivity	BAL-*, BALF-*, BALF-NR*	BlueNRG-*, S2-LP	MLPF-WB55-0*	STM32WB3*, STM32WB5*, STM32WLE*	ST25DV
	MCU	**EEPROM**	**Security Secure element**		
Control Unit	STM32L Series, STM32F0 Series, STM32F4 Series, STM32F7 Series, STM32H7 Series, STM32G0 Series	M24*, M93*, M95*	STSAFE-A1*		
	Environmental sensors	**Motion sensors**	**Microphones**	**e-Compass**	**Signal conditioning**
Sensing	Pressure: LPS2*, LPS3* T-Plus: LIS2DTW12 Temperature: STLM*, STTS* Humidity: HTS221	Accelerometers: IIS2D*, IIS2ICLX, IIS3DHHC, IIS3DWB Gyroscopes: I3G4250D i-NEMO: ISM330*	IMP23ABSU, IMP34DT05	IIS2MDC, ISM303DAC	Amplifiers and Comparators: LM2*, TS91*, TS92*, TS72*, TS88* Voltage References: TS3*, TL43*, TS82*
	DC-DC switching converters	**Linear Voltag Regulators**	**Battery management**	**Protections**	
Power management	STD10P*, STL*, STN3P*	STB*, STD1*, STD2*, STD3*, STD6*, STL*, STN*, STP*, STS*	STPS*, FERD*	ESDA*, ESDALC*, ESDZ*, USBLC6-*	

	Balun	Transceiver	RF Filter	Wireless SoC	
Wireless connectivity	BALF-NRG-0*, BALF-SPI-0*	BlueNRG-*, S2-LP	MLPF-WB55-0*	STM32WB3*, STM32WB5*	
	MCU	**EEPROM**	**TPM Secure element**		
Control Unit	STM32F7 Series, STM32H7 Series, STM32MP1 Series	M24*, M93*, M95*	STSAFE-J100, ST33GTPMI*		
	DC-DC switching converters	**Linear Voltag Regulators**	**Power over Ethernet**	**E-Fuse**	**Protections**
Power management	L49*, L59*, L69*, L79*, L7987*, ST1S* Multi-Output Controllers and Regulators STPMIC1	LD39*, LDLN0*, STLQ*	PM880*	STEF*, STPMIC02	SMB15*, SM15*, SM6T*, SMB6F*, SMC30J*, SMCJ*, ESDA*, SPT01-335DEE, STIEC45*

Main application boards and reference designs for condition monitoring and predictive maintenance are listed below with their order code. This is followed by an example of these solutions along with a few screenshots of our dashboard.

Main application boards and reference designs for condition monitoring and predictive maintenance

STEVAL-BFA001V2B

Multi-sensor predictive maintenance kit with IO-Link

STEVAL-STWINKT1B

STWIN SensorTile Wireless Industrial Node development kit and reference design for industrial IoT applications

STEVAL-IDP004V2

IO-Link master multi-port evaluation board based on L6360

With the solutions above you have all the necessary bricks to implement a PoC on condition monitoring and predictive maintenance from an end-to-end perspective:

- STEVAL-BFA001V2B: a smart sensor node ensuring wired connectivity thanks to IO-Link v.1.1
- STEVAL-STWINKT1: with its Wi-Fi expansion board (STEVAL-STWINWF1) this smart sensor node connects wirelessly to the cloud. A high-speed datalog software application (FP-SNS-Datalog1) is also available to facilitate data storage on a SD card, which can be analyzed even off line on a PC using Python scripts.
- STEVAL-IDP004V2: up to 4 IO-Link devices can be connected to this IO-Link Master hub
- Industrial gateway: a solution to enable edge processing and data injection in the Cloud can be implemented through our STM32MP1 and STM32MP2 series thanks to the OpenSTLinux expansion pack in source code and SD card image (X-LINUX-PREDMNT)

STM32 solutions are available so you can implement an in-field retrofit of existing or built-in condition-based monitoring (CbM) systems. To help you develop your PdM application, ST released a dedicated function pack running with a cutting-edge solution from one of our partners: **FP-AI-NANOEDG1**. This function pack lets you build a condition-monitoring application for industrial or consumer use even without any knowledge of data science or machine learning. This function pack is based on our SensorTile Wireless Industrial Node (STWIN) that uses industrial-grade sensors.

Our Predictive Maintenance Dashboard (search for DSH-PREDMNT or directly use Google Chrome at **https://dsh-predmnt.st.com/**) is a cloud-based application using AWS services to collect, visualize and analyze data streamed by sensor units tailored for vibration, environmental and ultrasound condition monitoring.

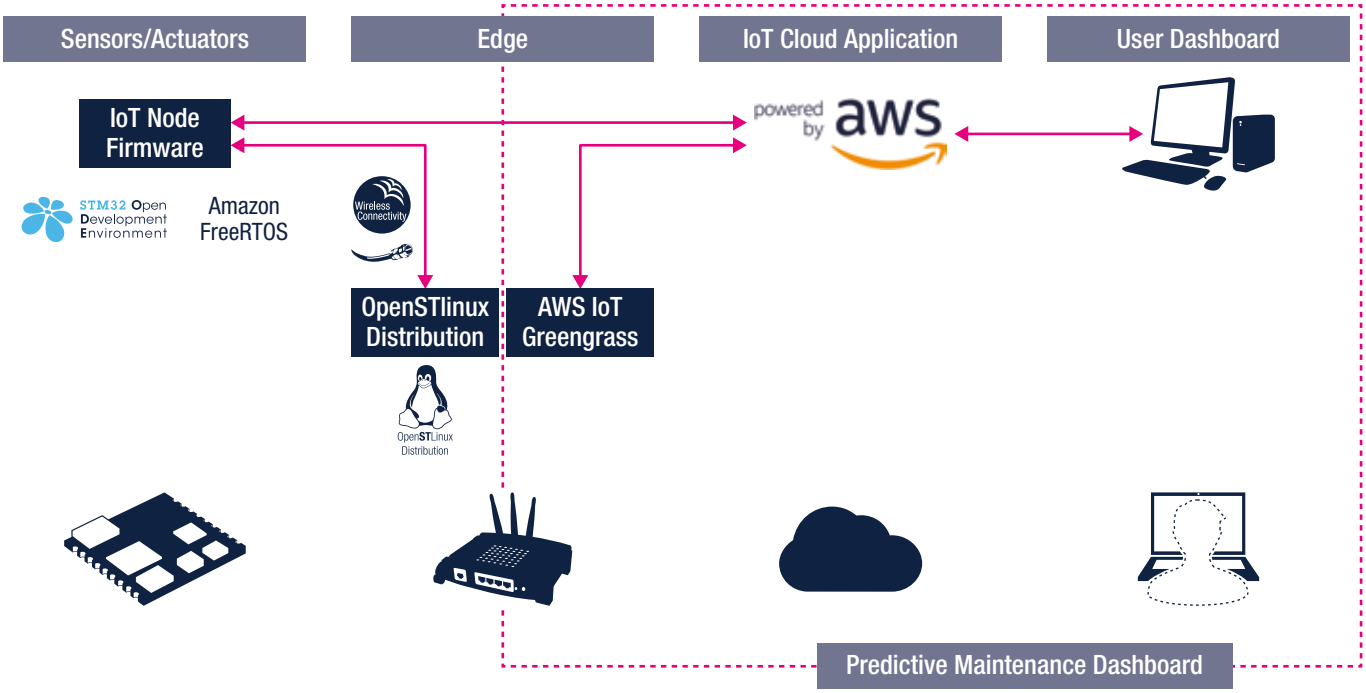

With the aim to facilitate the work of developers as much as possible, this dashboard is designed to host up to 5 registered devices for a duration of 6 months after you accept the license agreement.

INDUSTRIAL SAFETY

To facilitate the development and certification process of **safety-critical services and functions**, ST offers a range of hardware and software solutions. This includes a comprehensive set of certified software libraries and documentation to help manufacturers design products that meet functional safety standards. ST's **X-CUBE-STL** software package for STM32 MCUs and MPUs supports the design of **IEC 61508-certified solutions**, reaching **Safety Integrity Level (SIL2/SIL3)**.

Not only the Self-Test library for our MCUs but also smart power ICs for safe automation:

- Intelligent Power Switches including galvanic isolated ICs for driving actuators
- Current Limited Terminations to implement efficient and supply-free digital inputs for smart sensors
- DC/DC converters providing power supply for various circuits in safe applications

Our selected products for safe automation are certified by authorities like TÜV, UL and VDE.

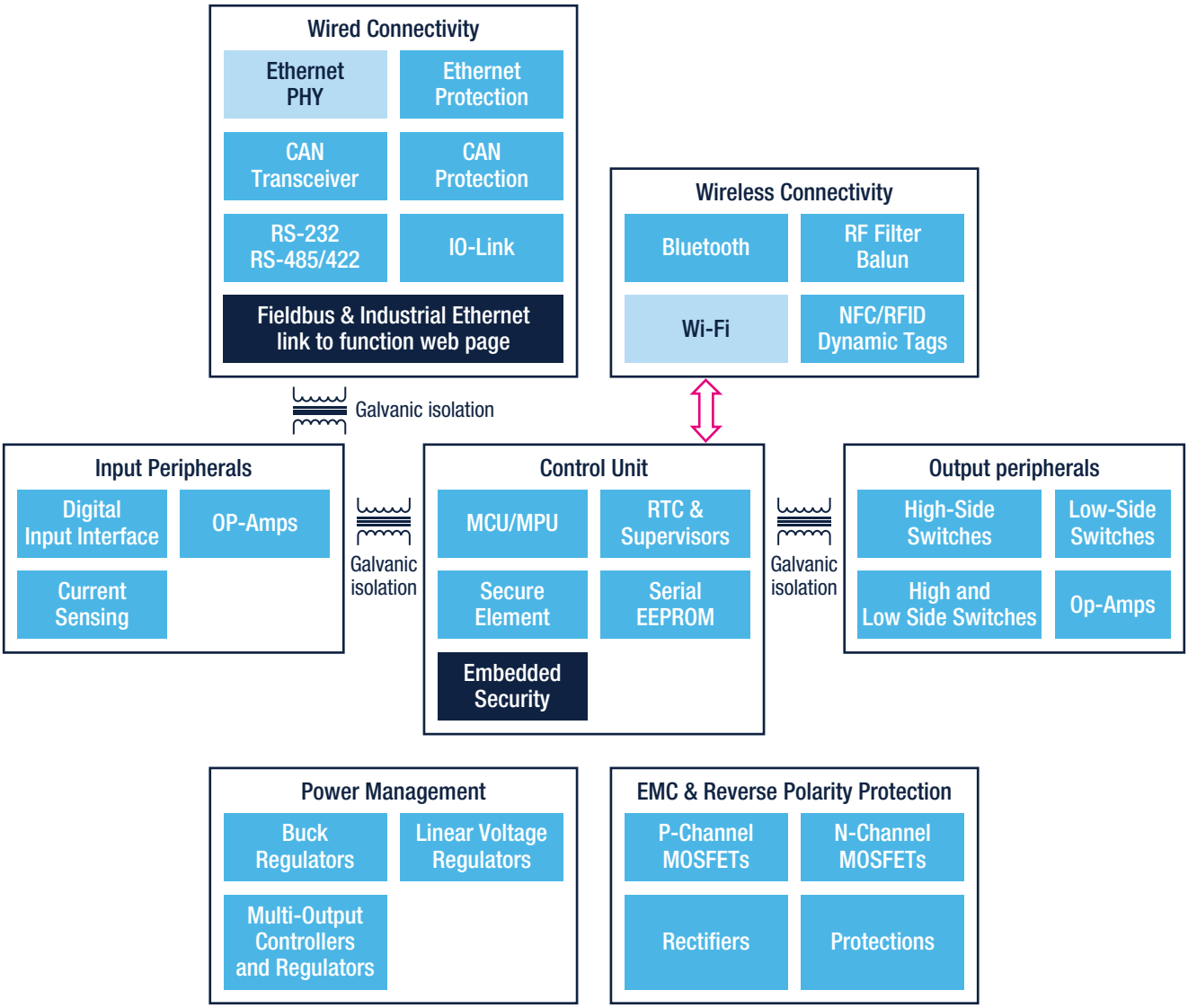

ICs offering for Industrial Safety:

	IO-Link	RS-232, RS-485/422	CAN Transceiver	CAN Protection	Ethernet Protection
Wired connectivity	L6360, L6362A, L6364	ST202*, ST232*, ST324*, ST3485*, ST485*	L9615	ESDCAN*	HSP051-4*10, HSP061-4M10, SLVU2.8
	NFC/RFID Dynamic Tags	**Bluetooth**	**RF Filter Balun**		
Wireless connectivity	M24LR*, M24SR*, ST25DV*	BlueNRG*, STM32WB3*, STM32WB5*	BAL-*, BALF-*, BALF-NR*		
	MCU	**Serial EEPROM**	**RTC & Supervisors**	**Secure Element**	
Control Unit	STM32F0*, STM32F1*, STM32F2*, STM32F4*, STM32F7*, STM32H7*, STM32G0*, STM32G4*, STM32L0*, STM32L4*, STM32L4+*	M24*, M93*, M95*	M48T*, M41T*, STM6*, STM7*, STWD100	STSAFE-A1*	
	Digital Input Interface	**Current sensing**	**Op-Amps**	**Galvanic Isolation Signal isolator**	
Input Peripherals	CLT03-2Q3	TSC201*	TSX63*, TSX92*	STISO621	
	High and Low Side Switches	**High-Side Switches**	**Low-Side Switches**	**Op-Amps**	
Output Peripherals	TDE170*	IPS160H, IPS161H, IPS160HF, IPS161HF, ISO8200*	IPS4260L	TSX63*, TSX92*	
	Multi-Output Controllers and Regulators	**Linear Voltage Regulators**	**Buck Regulators**		
Power management		LD*9, LDK*, LDL*, L78*, LD1*, LM2*, LM3*	L49*, L59*, L69*, L79*, L7987*, ST1S*		
	P-Channel MOSFETs	**N-Channel MOSFETs**	**Rectifiers**	**Protections**	
EMC & Reverse Polarity Protection	STD10P*, STL*, STN3P*	STB*, STD1*, STD2*, STD3*, STD6*, STL*, STN*, STP*, STS*	STPS*, FERD*	STEF01, SMB15*, SM15*, SM6T*, SMA6F*, SMB6F*, SMC30J*, SMCJ*, ESDA*, SPT01-335DEE, STIEC45*	

Suggested application boards and related ICs for fail-safe applications

STEVAL-IFP035V1

Isolated and non-isolated digital inputs on evaluation board based on CLT03-2Q3 self-powered current limited termination device

X-NUCLEO-OUT08A1

Industrial digital output expansion board based on IPS160HF for STM32 Nucleo

X-NUCLEO-OUT10A1

Industrial digital output expansion board based on IPS161HF for STM32 Nucleo

ARTIFICIAL INTELLIGENCE

Use the power of **Machine Learning** and **Artificial Intelligence** to enhance signal processing performance, increase productivity and add new capabilities to your application. STMicroelectronics MCUs and MPUs allow you to run **AI** algorithms locally without necessarily relying on Cloud capabilities. Embed Machine learning and deep learning algorithm into your STM32 based solutions for the industrial environment and take advantage of AI on the edge for added-value capabilities, like:

- Better user experience
- Realtime, no latency
- Reliability
- Privacy by design
- Optimized Cloud usage
- Sustainable on energy

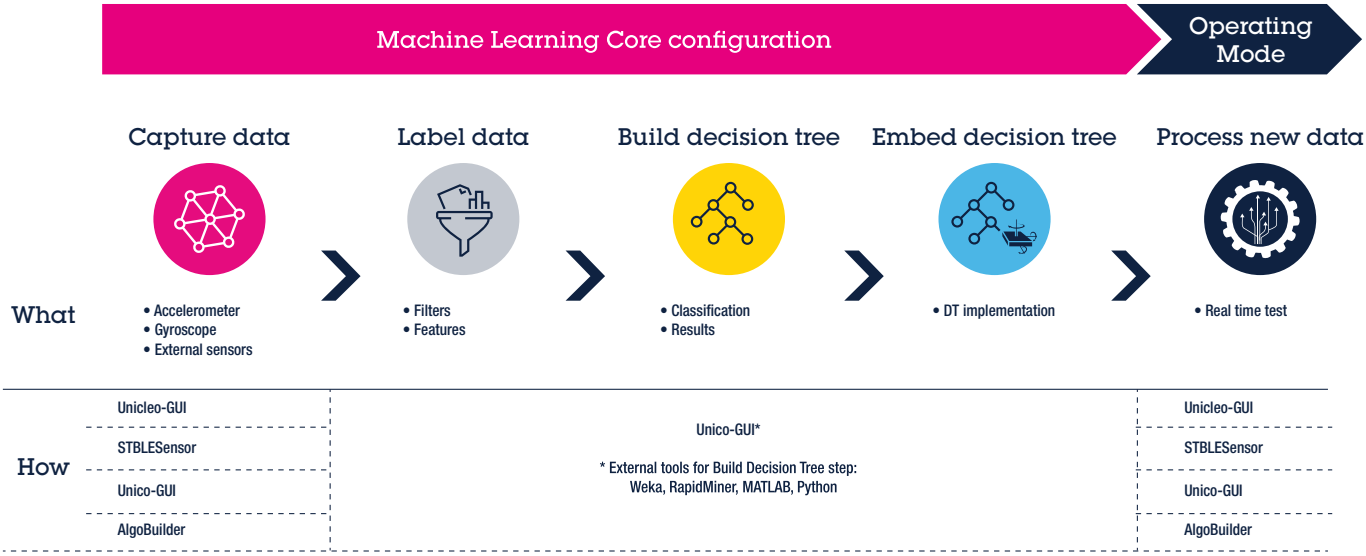

Computer vision at the edge for Factory automation

Tools and ecosystem allow customers to run computer vision applications through all STM32 portfolio, from low-power microcontrollers to high performance MCUs and microprocessors. This includes person presence detection, image classification, in-line inspection, aftermarket meter reader and many more.

Easily give vision to your STM32 products for new features and add-on services thanks to **STM32Cube.AI** and our code example available in our new vision function pack.

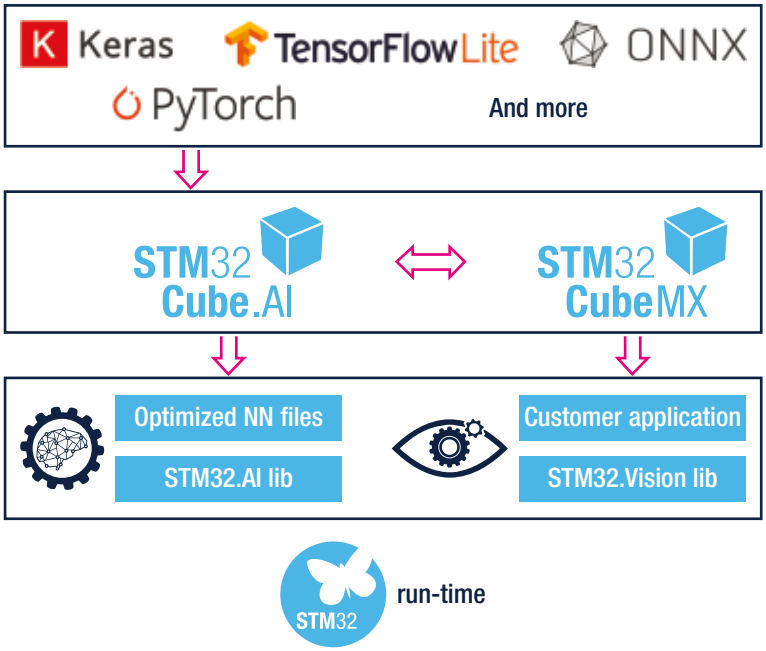

The new **FP-AI-VISION1 image classification function pack** performs Convolutional Neural Networks (or CNNs) on our high-performance MCUs. This function pack is designed as a project to help you kick-start and test your own **computer vision for Image classification application**.

Dedicated small and low power boards are available to rapidly prototype computer vision on STM32. The **STM32H747I-DISCO** can load and operate in real time the Convolutional Neural Network optimized using STM32Cube.AI to extend your project with machine vision.

STM32H747I-DISCO

OpenMV H7 cam can also be used for rapid development thanks to a wide set of OpenMV computer vision libraries and simple run time configuration via the microPython environment.

This allows to easily load and operate in real time the Neural Network optimized using STM32Cube.AI to extend your project with machine vision.

AI ON MCUS: STM32Cube.AI

The **STM32Cube.AI** is an extension pack of the widely used STM32CubeMX configuration and code generation tool, enabling AI on STM32 Arm® Cortex®-M-based microcontrollers.

It extends STM32CubeMX capabilities with automatic conversion of pre-trained Neural Network and integration of generated optimized library into the user's project, instead of building hand-crafted code, and enable to embed deep learning solution on the broad STM32 microcontroller portfolio.

STM32Cube.AI provide native support of various Deep Learning frameworks such as Keras, TensorFlow™ Lite, Caffe, ConvNetJs and Lasagne, and support of all frameworks that can export to the ONNX standard format such as PyTorch™, Microsoft® Cognitive Toolkit, MATLAB® and more.

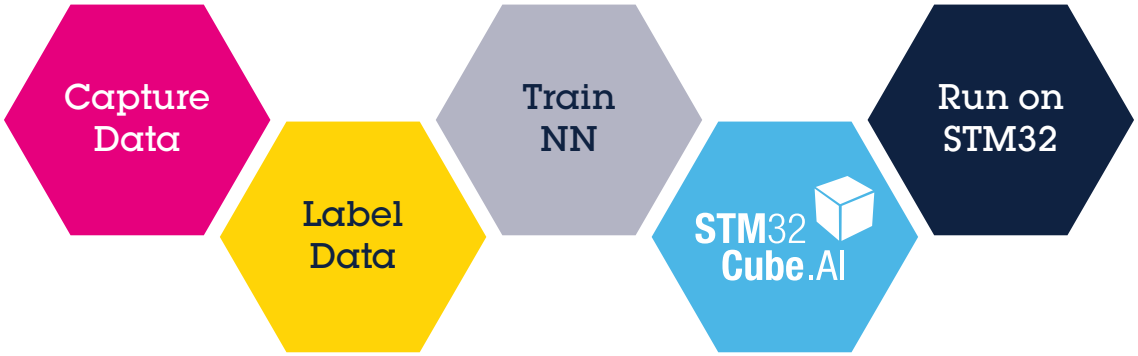

STM32Cube.AI allows the use of larger networks by storing weights in external Flash memory and activation buffers in external RAM, On-device validation enable fast comparison of model accuracy and supports 8-bit quantization of Keras networks and TensorFlow™ Lite quantized networks and allow to easily port models across different STM32 microcontroller series through STM32Cube integration.

The new X-Cube-AI v5.2 brings the following features:

- Relocatable Binary model support: it is now possible to use relocatable models that can be fully updated (weights but also topology) without flashing the complete end-user firmware. A compiled version of the NN C-files including kernel functions and weights is generated offline.
- TFLite and Keras importer have been rebased on TensorFlow 2.3: that means up to Keras v2.4.0 model can now be imported.
- Performance improvement wherever weights location: just update X-Cube-AI current version to let your model run faster.

AI ON MPUS: OpenSTLinux

Us In addition to the Cortex-M4 used with STM32Cube.AI and to fully take advantage of the STM32MP1 capabilities, ST propose to run various AI frameworks on dual Cortex-A7 thanks to **OpenSTLinux** distribution.

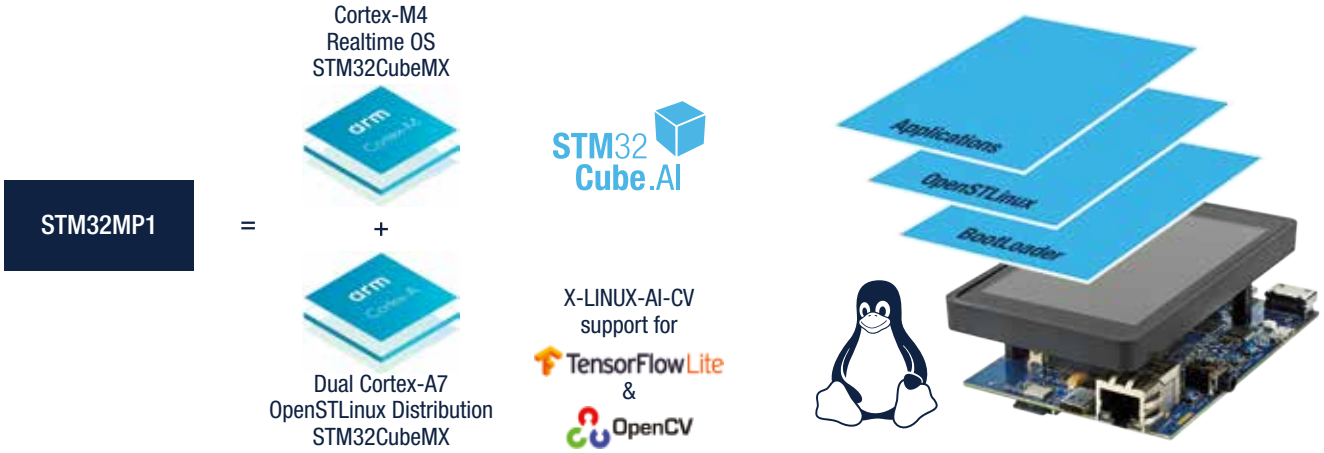

X-LINUX-AI is an STM32 MPU OpenSTLinux Expansion Package addressing Artificial Intelligence for STM32MP1 Series microprocessors. It contains Linux® AI frameworks, as well as application examples to get started with some use cases such as computer vision.

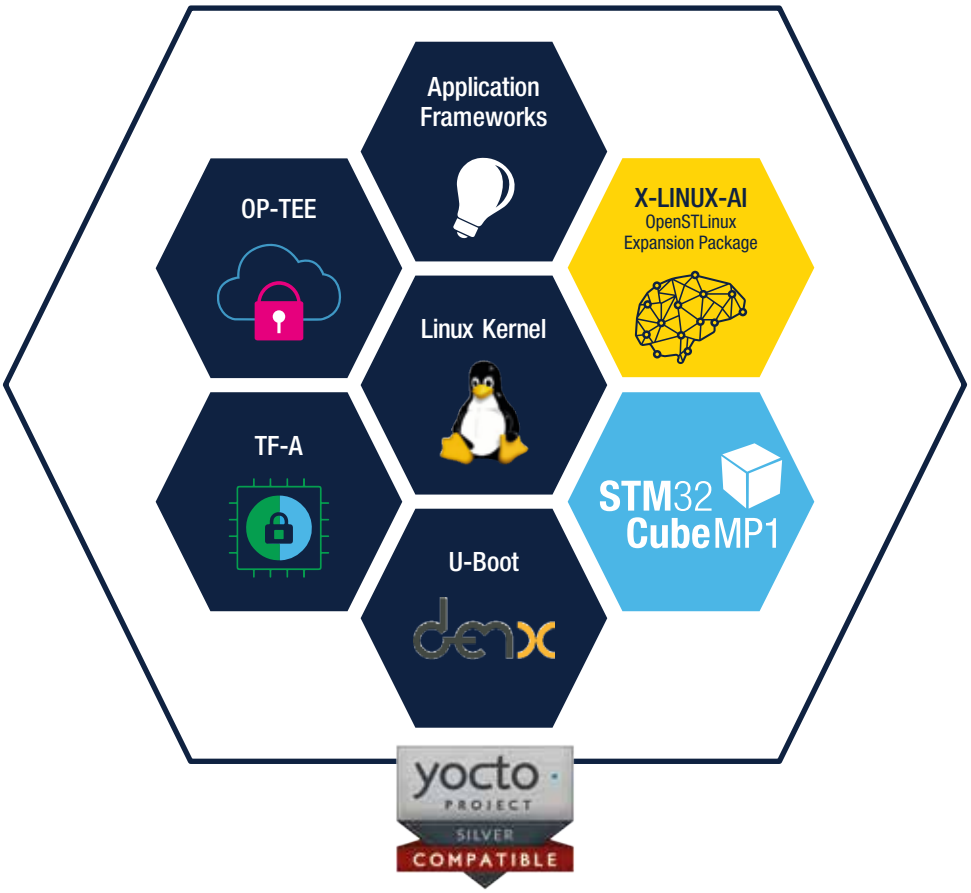

MAKING AI ACCESSIBLE NOW

Leader in Arm® Cortex®-M 32-bit General Purpose MCU

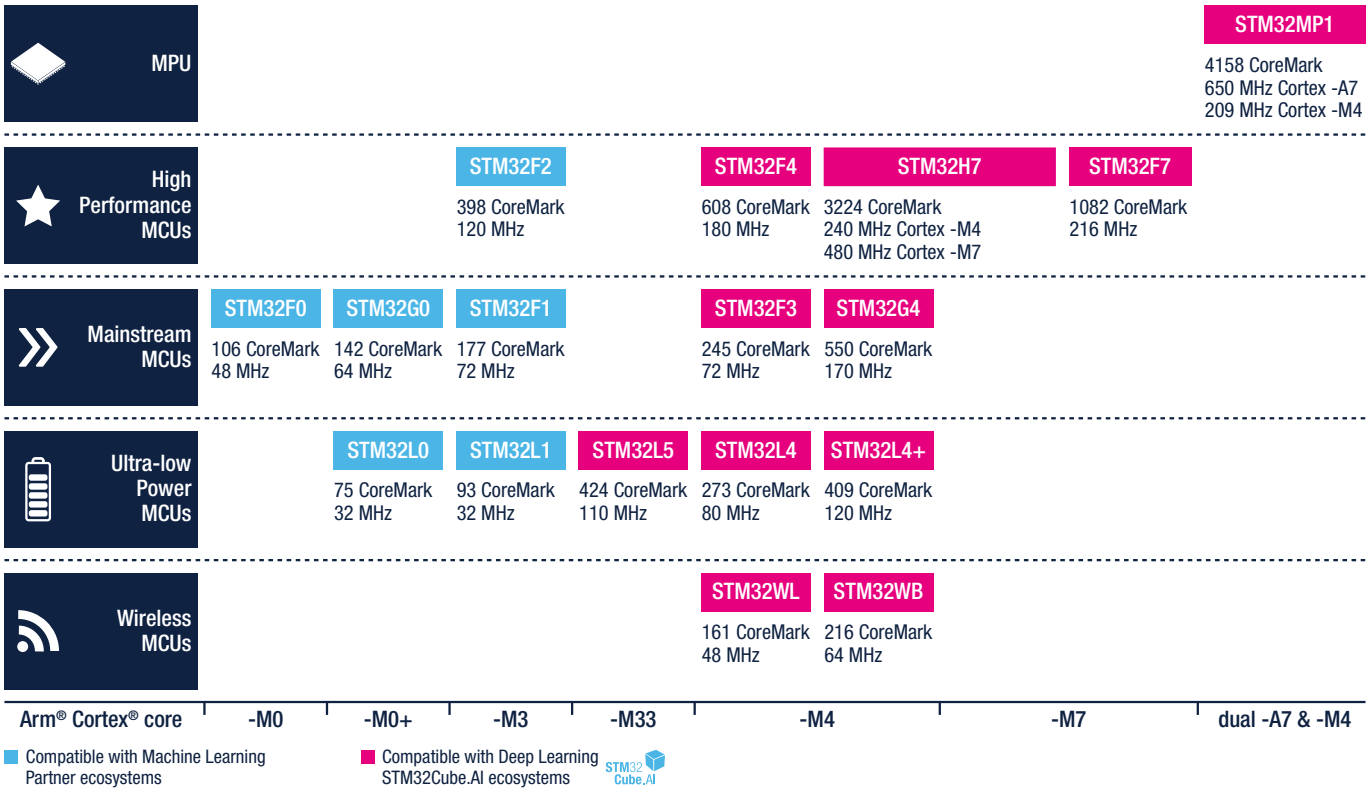

Learn more at **st.com/STM32cubeAI**

Products

Motor drivers and Gate drivers

Our line-up of STSPIN motor control ICs has been developed with the objectives of modularity, scalability and robustness to provide designers a wide choice of solutions to fit different requirements and system architectures to drive motors.

All products have comprehensive built-in protection and diagnostic schemes to help attain the level of long-term reliability and robustness requested to cope with harsh factory automation environments.

Available in a wide selection of space-saving, thermally-optimized packages, you are sure to find a device in our STSPIN line-up that addresses your motor or motion control system requirements.

Particularly noteworthy are the adaptive current decay control scheme used in many of the STSPIN motor driver ICs as well as the innovative voltage mode driving used in micro-stepping motor drivers.

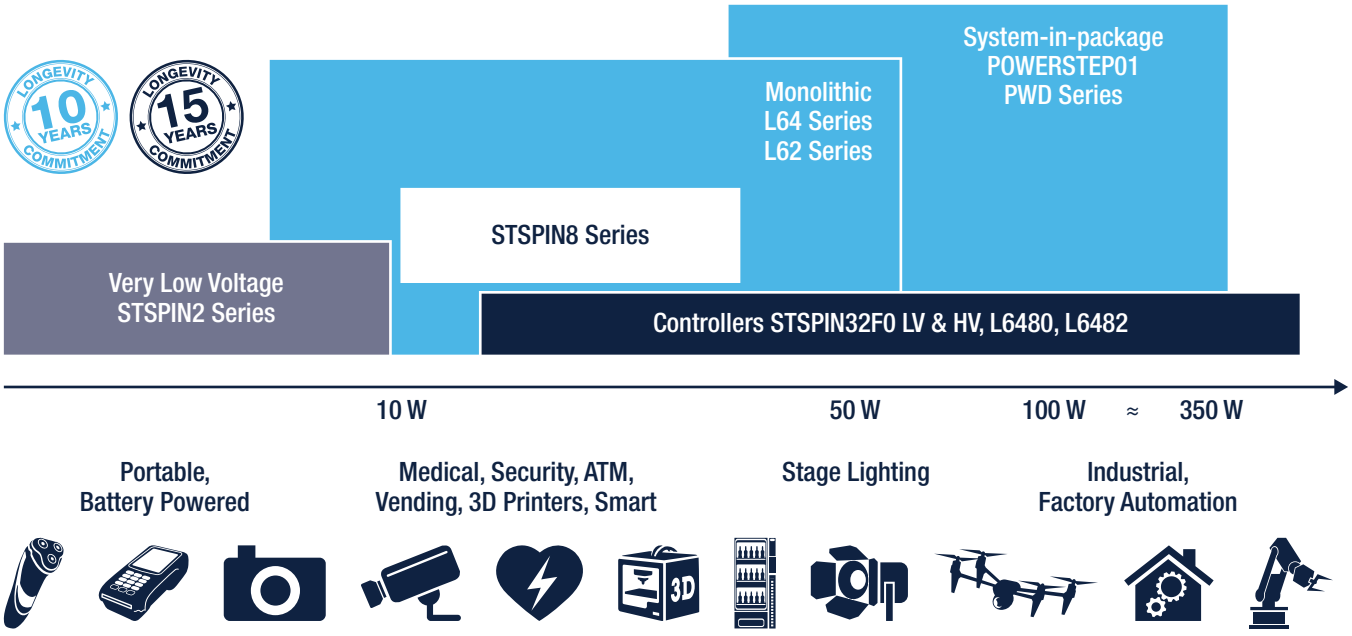

STSPIN8 SERIES

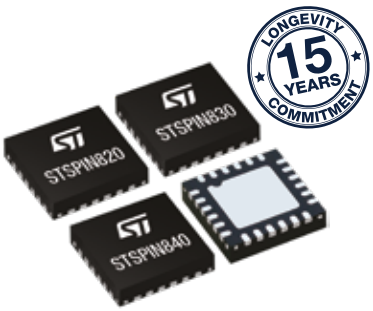

STSPIN8 series represents an extension of STSPIN2 series, able to operate at a higher supply voltage. It consists of 3 fully integrated motor drivers packaged in a 4x4mm QFN package, integrating both the control logic and a fully protected low RDSon power stage making them a bullet proof solution for the new wave of demanding industrial applications. **STSPIN820** allows you to control stepper motors with a high resolution of up to 256 µsteps, **STSPIN830** is field oriented control compliant and enables 3 shunt resistors implementation while **STSPIN840** can be used in parallel mode in order to drive a brushed DC motor at a higher equivalent current.

STSPIN820
Stepper

STSPIN830
3phase BLDC

STSPIN840
Dual DC

Part number	Desription	Vin min (V)	Vin max (V)	Rdson (Ohm)	I out max (Arms)
STSPIN820	Microstepping driver up to 256 microsteps	7	45	0.5	1.5
STSPIN830	3-phase 3-shunts BLDC motor driver				
STSPIN840	Dual brushed DC motor driver			0.5 (0.25*)	1.5 (3*)

Note: * Features allowed in parallel mode driving

MAIN APPLICATIONS

- Stage lighting and antenna control
- 3D printers
- Vending and textile machines
- ATM and money handling machines
- Factory automation end-points
- Medical and healthcare equipment
- Video surveillance and dome cameras

STSPIN32F0 SERIES

STSPIN32F0 series is a family of self-supplied Systems-In-Package integrating a Cortex-M0™ microcontroller and an advanced 3-phase gate driver. The embedded MCU gives the freedom to configure the device with the motion control algorithm which best fits the end application targets. ST offers a set of pre-defined FW algorithms, spanning from more classical 6-step to the advanced sensorless field-oriented control.

Internal 3.3 V DC/DC buck converter and 12 V LDO linear regulator supply the MCU, external components and gate drivers. Operational amplifiers are available, and they can be used for signal conditioning of analog Hall-effect sensors or shunt resistor signals.

Programmable threshold over current protection is guaranteed by the embedded comparator.

For Smart Industry and High-End Consumer

- Highly integrated system-in-package 7x7 mm
- Complete ST ecosystem comprising tools and SWs including motor-control algorithms

Part number	Desription	Vin min (V)	Vin max (V)
STSPIN32F0	Advanced BLDC controller with embedded STM32 MCU	8	45
STSPIN32F0A		6.7	45
STPIN32F0B		6.7	45

MAIN APPLICATIONS

- Power tools
- Fans
- Vacuum cleaners, other HA
- Industrial automation and control
- Robotic arms
- Drones (gimbal and ESC control)

STSPIN32F0 HV SERIES

STSPIN32F0 HV family extends the flexibility and all the features of STM32-based motor controllers to high voltage applications. Four pin-to-pin Systems-in-Package integrating an STM32 Cortex-M0 MCU and high-voltage 3-phase gate drivers, with embedded smartShutDown™. Advanced and fully protected 3-phase BLDC controllers are available for applications running up to 250 V and 600 V, at respectively two different gate currents of 0.35 A and 1 A. Thanks to the motor controllers' high scalability in home appliances and industrial applications, designers can easily design and reuse their current hardware and firmware in all applications fitting main voltage supplies (110 VAC & 220 VAC), without having to change PCB.

Part number	Desription	Vin min (V)	Vin max (V)	Vout max (V)
STSPIN32F0251	250 V 3-phase driver with STM32	9	20	250
STSPIN32F0252				
STSPIN32F0601	600 V 3-phase driver with STM32	9	20	600
STSPIN32F0602				

POWERSTEP01

The **POWERSTEP01** is a highly configurable high current stepper motor driver able to operate up to 85 V. It integrates an advanced microstepping controller and 8 power MOSFETs, featuring a 16 mΩ $R_{DS(ON)}$.

Thanks to proprietary and patented technologies, the device can be configured to drive the motors in voltage or in current mode. The voltage mode allows to obtain very smooth and silent motion performance, while the current driving guarantees the full control of the motor current. Many other advanced features are available such as the full customization of the motion profile (acceleration, deceleration, speed, etc.), positioning calculations, sensorless stall detection, real-time diagnostics and user-configurable failure protections.

A very rich set of protections make the POWERSTEP01 bullet proof, as required by the most demanding motor control applications.

Part number	Desription	Vin min (V)	Vin max (V)	Rdson (Ohm)	I out max (Arms)
powerSTEP01	System-in-package integrating microstepping controller and 10 A power MOSFETs	7.5	85	0.016	10

MAIN APPLICATIONS

- Textile Machines
- Sewing Machines
- Robot Welders
- Industrial label printers
- Industrial dozers and mixer

Stepper motor drivers

Part number	Package	General description	$R_{DS(on)}$ (Ω)	Supply voltage (V)		Output Current-Max (A) RMS	Operating temperature	
				Min.	Max.		Min. (°C)	Max. (°C)
powerSTEP01	VFQFPN 11x14x1	System-in-package integrating microstepping controller and 10 A power MOSFETs	0.016	7.5	85	10	-40	150
STSPIN220	VFQFPN 16 3x3x1.0	Low Voltage Motor driver with up to 256 microsteps and embedded PWM current control	0.2	1.8	10	1.3		
L6474	HTSSOP28; PowerSO 36	Motor driver up to 16 microsteps with SPI and advanced current control	0.3	8	45	3		
L6472	HTSSOP28; PowerSO 36	Full features motor driver up to 128 microsteps with SPI, motion engine and advanced current control						
L6470								
L6208	PowerSO 36, SO24	Stepper motor driver with embedded current control			52	2.8		
L6208Q	VFQFPN 48 7x7x1.0							
STSPIN820	TFQFPN 4x4x1.05 - 24L	Compact advanced 256 microsteps motor driver with step-clock and direction interface	0.5	7	45	1.5		
L6258	PowerSO36	PWM controlled high current DMOS universal motor driver	0.6	12	40*	1.5*	-40*	
L6228	PowerSO 36, SO24	Stepper motor driver with embedded current control	0.7	8	52	1.4	-40	
L6228Q	VFQFPN 32 5x5x1.0							
L6219	SO24	Stepper motor driver	-	4.5*	46*	0.75*	-40*	125*
L6482	HTSSOP38	Stepper controller with SPI, motion engine, gate drivers and advanced current control featuring 128 microsteps	-	7.5	85	-	-40	150
L6480			-			-		
L297	PDIP 20; SO-20	Stepper motor controller	-	4.75	7	-		

Note: * The value may vary depending on the part number

Brushed DC motor drivers

Part number	Package	General description	$R_{DS(on)}$ (Ω)	Supply voltage (V)		Output Current-Max (A) RMS	Output Current-Max (A) peak	Operating temperature	
				Min.	Max.			Min. (°C)	Max. (°C)
PWD5F60	VFQFPN 15x7x1 mm.	High voltage full bridge with integrated comparators	1.4	10	600	5	14	-40	125
PWD13F60	VFQFPN 10x13x1.0	High voltage full bridge with integrated smart driver	0.3	6.5	600	8	32		
STSPIN240	VFQFPN 16 3x3x1.0	Low voltage dual brushed DC motor driver	0.2	1.8	10	1.3	2	-40	150
STSPIN250		Low voltage brushed DC motor driver	0.1	1.8	10	2.6	4		
L6205	PDIP20; PowerSO-20; SO20	Versatile DMOS dual full bridge motor drivers with embedded PWM current control	0.3	8	52	2.8	7.1		
L6206	PowerSO 36; SO24								
L6206Q	VFQFPN 48 7x7x1.0								
L6207	PowerSO 36; SO24								
L6207Q	VFQFPN 48 7x7x1.0								
STSPIN840	TFQFPN 4x4x1.05 - 24L	Compact dual brushed DC motor driver with embedded PWM current control	0.5	7	45	1.5	2.5		
L6225	PDIP20; PowerSO-20; SO20	Versatile DMOS dual full bridge motor drivers with embedded PWM current control	0.7	8	52	1.4	3.55		
L6226	PowerSO 36; SO24								
L6226Q	VFQFPN 32 5x5x1.0								
L6227	PowerSO 36; SO24								
L6227Q	VFQFPN 32 5x5x1.0								
L6201	PowerSO-20; SO-20	DMOS full bridge motor driver	0.3	12	48	1	5		
L6202	PDIP 18						10		
L6203	MW 11L								
L2293Q	VFQFPN 32 5x5x1.0	Push-pull four channels motor driver with diodes	-	4.5	36	0.6	1.2		
L293D	PDIP 16; SO-20								
L293B	PDIP 16					1	2		
L293E	PDIP 20								
L298	MW 15L; PowerSO-20	Dual full bridge motor driver				2	-		

3-phase Brushless DC motor drivers

Part number	Package	General description	$R_{DS(on)}$ (Ω)	Supply voltage (V)		Output Current-Max (A) RMS	Output Current-Max (A) peak	Operating temperature	
				Min.	Max.			Min. (°C)	Max. (°C)
STSPIN32F0	VFQFPN 48 7x7x1	Advanced BLDC controller with embedded STM32, DC-DC; optimized for FOC	-	8	45	-	0.6	-40	125
STSPIN32F0A	VFQFPN 48 7x7x1	Advanced BLDC controller with embedded STM32, DC-DC, extended V Range and optimized for 6-step control	-	6.7	45	-	0.6		
STSPIN32F0B	VFQFPN 48 7x7x1	Advanced BLDC with embedded STM32, DC-DC, extended V Range and extra GPIOs	-	6.7	45	-	0.35		
STSPIN32F0251	TQFP 64 10x10x1	250 V Advanced BLDC with embedded STM32	-	9	20	-	0.35		
STSPIN32F0252	TQFP 64 10x10x1	250 V Advanced BLDC with embedded STM32 and extra current capability, DCDC, extended V Range and extra GPIOs	-	9	20	-	1		
STSPIN32F0601	TQFP 64 10x10x1	600 V Advanced BLDC with embedded STM32	-	9	20	-	0.35		
STSPIN32F0602	TQFP 64 10x10x1	600 V Advanced BLDC with embedded STM32 and extra current capability	-	9	20	-	-1		
STSPIN830	TFQFPN 4x4x1 - 24L	Compact 3-phase integrated motor driver optimized for 3 shunts configuration	0.5	7	45	1.5	2.5	-40	150
STSPIN230	VFQFPN 16 3x3x1	Low voltage 3-phase integrated motor driver	0.2	1.8	10	1.3	2		
STSPIN233	VFQFPN 16 3x3x1	Low voltage 3-phase integrated motor driver optimized for 3 shunts control	0.2	1.8	10	1.3	2		
L6229	PowerSO 36; SO-24	3-phase 6-step integrated motor drivers with embedded Hall sensors decoding logic	0.7	8	52	1.4	3.55		
L6229Q	VFQFPN 32 5x5x1		0.7	8	52	1.4	3.55		
L6235	PowerSO 36; SO-24		0.3	8	52	2.8	7.1		
L6235Q	VFQFPN 48 7x7x1		0.3	8	52	2.5	7.1		
L6230	PowerSO 36; VFQFPN 32 5x5x1	Triple half-bridge integrated motor drivers	0.7	8	52	1.4	3.55		
L6234	PDIP 20; PowerSO-20		0.3	7	52	2.8	5		

STSPIN PACKAGE OPTIONS EXAMPLES

QFN 11x14

VFQFPN 10x13

QFN 7x7 48L


QFN 3x3

POWERSO36

HTSSOP38

Dip20

SO24

A COMPLETE ECOSYSTEM IS PROVIDED TO SUPPORT DESIGN-IN AND SHORTEN TIME-TO-MARKET

A wide range of evaluation boards is provided, together with low cost plug-and-play discovery kits: schematics, BOMs and gerber files are available to give you a headstart with your hardware design together with comprehensive technical documentation.

Software suites are also provided to enable quick and easy development of motor driving solutions.

In addition, STSPIN motor drivers can be easily evaluated in combination with an STM32 32-bit microcontroller in an open, flexible and affordable development environment to enable fast prototyping that can quickly be transformed into final designs.

The comprehensive development environment includes STM32 Nucleo development boards for all STM32 microcontroller series.

SPEED-UP YOUR DESIGN WITH X-NUCLEO!

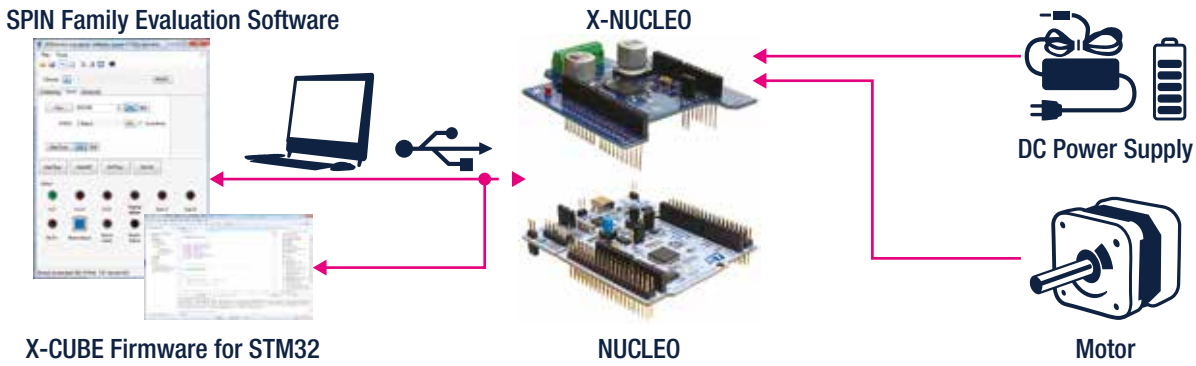

Find your X-Nucleo now on st.com/x-nucleo

>50 ready to use Evaluation Boards

EVALUATION BOARD SETUP

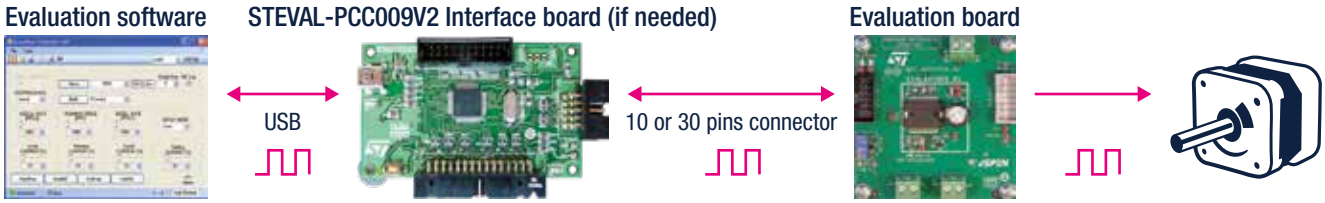

GATE DRIVERS

The **STDRIVE** family covers devices with higher ratings for motion control systems. Available in a wide selection of current output drive capabilities and configurations – independently driven high and low side or with on-chip dead time – the STDRIVE high voltage drivers include on-chip op amps and comparators to help design converter protection circuits.

Low-Side	600 V High-Voltage Half-Bridge			Galvanic isolation
TD352		L6399	L6498/L	STGAP1AS
TD352		L6398	L6494/L	STGAP2S
TD352	L6388E	L6395	L6491	STGAP2D
	L6387E	L6393		STGAP2HS
PM8851	L6386E	L6392		STGAP2HD*
PM8841	L6385E	L6391		STGAP2SiCS
PM8834	L6384E	L6390		STGAP2SiCD*
		STDRIVEG600*		

Three-Phase half bridge

75 V	600 V
STDRIVE101	STDRIVE601

Note: * Short to come

KEY FEATURES

- Half-bridge, single channel and multichannel gate drivers
- State-of-the-art integration thanks to:
  - HV bootstrap diode
  - Op-amp
  - Comparator
  - Smart shutdown

STDRIVE high voltage half-bridge gate drivers

Our high-voltage drivers are designed to optimize Field Oriented Control motor drive systems and feature excellent performance at high switching frequency. The smart shutdown function helps to effectively protect the final application. STDRIVE MOSFET and IGBT gate drivers can integrate a comparator for protection, an operational amplifier for current sensing and an integrated bootstrap diode, thus reducing the number of external components required at system level. ST's new STDRIVE family of half-bridge MOSFET and IGBT gate drivers is designed to operate in harsh industrial environments withstanding high voltages up to 600 V, while maintaining good noise immunity and low switching losses. L6491, L6494, and L6498 high voltage half bridge gate drivers are particularly suited for medium- and high-capacity power switches thanks to their sink/source current capability up to 4 A.

Part number	Supply Voltage (V) max	Protection Option Type	Key features	Output current max (A)	Input configuration	Grade	Undervoltage lockout (V) (all nominal values)				Operating temperature (°C)		Package
							on V_{CC} ON	on V_{CC} OFF	on V_{Boot} ON	on V_{Boot} OFF	Min	Max	
A6387	18	Interlocking function	Bootstrap diode	0.65	HIN, LIN	Automotive	6.0	5.5	-	-	-40	125	SO-8
L6384E	17	UVLO	Adjustable deadtime, Bootstrap diode	0.65	SD, Single IN	Industrial	12	10	-	-	-40	125	DIP-8 SO-8
L6385E	17	UVLO	Bootstrap diode	0.65	HIN, LIN	Industrial	9.6	8.3	9.5	8.2	-40	125	DIP-8 SO-8
L6386AD	17	UVLO, Comparator	Bootstrap diode	0.65	HIN, LIN, SD	Industrial	9.6	8.3	-	8.2	-40	125	SO-14
L6386E	17	UVLO, Comparator	Bootstrap diode	0.65	HIN, LIN, SD	Industrial	12	10	11.9	9.9	-40	125	SO-14
L6387E	17	UVLO, Interlocking function	Bootstrap diode	0.65	HIN, LIN	Industrial	6	5.5	-	-	-40	125	DIP-8 SO-8

Part number	Supply Voltage (V) max	Protection Option Type	Key features	Output current max (A)	Input configuration	Grade	Undervoltage lockout (V) (all nominal values)				Operating temperature (°C)		Package
							on V_{CC} ON	on V_{CC} OFF	on V_{Boot} ON	on V_{Boot} OFF	Min	Max	
L6388E	17	UVLO, Interlocking function	Adjustable deadtime, Bootstrap diode	0.65	HIN, LIN	Industrial	9.6	8.3	9.5	8.2	-40	125	DIP-8 SO-8
L6389E	17	UVLO, Interlocking function	Adjustable deadtime, Bootstrap diode	0.65	HIN, LIN	Industrial	9.6	8.3	9.5	8.2	-40	125	DIP-8 SO-8
L6390	20	UVLO, Comparator, Interlocking function, Smart shutdown	Adjustable deadtime, Bootstrap diode, Operational Amplifier	0.43	HIN, LIN, SD	Industrial	12	10.5	11.5	10	-40	125	SO-16
L6391	20	UVLO, Comparator, Interlocking function, Smart shutdown	Adjustable deadtime, Bootstrap diode	0.43	HIN, LIN, SD	Industrial	12	10.5	11.5	10	-40	125	SO-14
L6392	20	Interlocking function	Adjustable deadtime, Bootstrap diode, Operational Amplifier	0.43	HIN, LIN, SD	Industrial	12	10.5	11.5	10	-40	125	SO-14
L6393	20	Comparator	Adjustable deadtime, Bootstrap diode	0.43	SD	Industrial	9.5	8	9	8	-40	125	SO-14
L6395	20	-	Bootstrap diode	0.43	HIN, LIN	Industrial	9.5	8.8	8.6	8	-40	125	SO-8
L6398	20	Interlocking function	Bootstrap diode	0.43	HIN, LIN	Industrial	9.5	8.8	9	8	-40	125	DIP-8 SO-8
L6399	20	Interlocking function	Bootstrap diode	0.43	HIN, LIN	Industrial	9.5	8	9	9	-40	125	SO-8
L6491	20	Interlocking function, Comparator, Smart shutdown	Adjustable deadtime, Bootstrap diode	4	HIN, LIN, SD	Industrial	9.3	8.7	8.6	8	-40	125	SO-14
L6494	20	UVLO	Adjustable deadtime, Bootstrap diode	2	HIN, LIN, SD	Industrial	9.3	8.7	8.6	8	-40	125	SO-14
L6498	20	UVLO, Interlocking function	Bootstrap diode	2	HIN, LIN, SD	Industrial	9.3	8.7	8.6	8	-40	125	SO-8 SO-14
TD350E	26	UVLO, Miller Clamp, 2 level turn off, DESAT	-	2.3	-	Industrial	-	-	-	-	-40	125	SO-14
TD351	26	UVLO, Miller Clamp, 2 level turn off	-	1.7	-	Industrial	-	-	-	-	-40	125	SO-8
TD352	26	UVLO, Miller Clamp, DESAT	Adjustable deadtime	1.7	-	Industrial	-	-	-	-	-40	125	SO-8

STDRIVE three-phase bridge gate drivers

ST's three-phase STDRIVE are designed to integrate in a single component all the required gate drivers for three-phase motor applications. That responds to the industrial market trend towards higher levels of integration and lower development costs. High level of integration, moreover, can offer a better matching of critical parameter in power applications, as propagation delays.

Part number	Supply Voltage (V) max	Protection Option Type	Key features	Output current max (A)	Input configuration	Grade	Undervoltage lockout (V) (all nominal values)				Operating temperature (°C)		Package
							on V_{CC} ON	on V_{CC} OFF	on V_{Boot} ON	on V_{Boot} OFF	Min	Max	
STDRIVE101	36	UVLO, Comparator, VDS monitoring	Bootstrap diode	0.6	INH, INL IN, EN	Industrial	5.5	5.4	5	4.9	-40	125	VFQFN-24
STDRIVE601	21	UVLO, Comparator, Interlocking function, Smart shutdown	Bootstrap diode	0.35	HIN, LIN, SD	Industrial	8.5	8	8	7.5	-40	125	SO-28

STDRIVE family

STGAP is a platform of isolated gate drivers with embedded isolation which provides robustness and noise immunity. A silicon isolation is used to transfer effectively signals between input and output. STGAP includes dedicated products able to drive properly IGBT, MOSFET, SiC or GaN.

Part number	Supply Voltage (V) max	Max GND to GND_ISO Voltage (V)	Protection Option Type	Key features	Output current max (A)	Input configuration	Grade	UVLO (V)		Operating temperature (°C)		Package
								(on V_{CC} ON) nom	(on V_{CC} OFF) nom	Min	Max	
STGAP1AS	36	1500	Miller Clamp, DESAT, Overcurrent detection, 2 level turn off, VCE overvoltage protection, Temperature warning, Shutdown protection, UVLO, OVLO	4 kV galvanic isolation, Adjustable deadtime, Thermal shutdown	5	IN+, SD	Automotive	4.1	3.8	-40	125	SO-24
STGAP2SM	26	-	UVLO, Miller Clamp, Shutdown protection	1.7 kV functional isolation, Thermal shutdown	4	IN+, IN-	Industrial	9.1	8.4	-40	125	SO-8
STGAP2SCM	26	-	UVLO, Separated outputs, Shutdown protection	1.7 kV functional isolation, Thermal shutdown	4	IN+, IN-	Industrial	9.1	8.4	-40	125	SO-8
STGAP2HSM	26	1200	UVLO, Miller Clamp, Shutdown protection	6 kV galvanic isolation, Thermal shutdown	4	IN+, IN-	Industrial	9.1	8.4	-40	125	SO-8
STGAP2HSCM	26	1200	UVLO, Separated outputs, Shutdown protection	6 kV galvanic isolation, Thermal shutdown	4	IN+, IN-	Industrial	9.1	8.4	-40	125	SO-8
STGAP2DM	26	1200	UVLO, Shutdown protection	6 kV galvanic isolation, Thermal shutdown	4	IN+, IN- SD, BRAKE	Industrial	9.1	8.4	-40	125	SO-16
STGAP2HDM*	26	1200	UVLO, Separated outputs, Miller Clamp, Shutdown protection	6 kV galvanic isolation, Thermal shutdown	4	IN+, IN- SD, BRAKE	Industrial	9.1	8.4	-40	125	SO-36 4 pin left

Note: * Short to come

SIC and GaN gate drivers

SiC and GaN power switches are addressed by some products with dedicated performances.

Part number	Supply Voltage (V) max	Protection Option Type	Key features	Output current max (A)	Input configuration	Grade	Undervoltage lockout (V) (all nominal values)				Operating temperature (°C)		Package
							on V_{CC} ON	on V_{CC} OFF	on V_{Boot} ON	on V_{Boot} OFF	Min	Max	
STGAP2SiCS	26	UVLO, Miller Clamp, Shutdown protection	Thermal shutdown	4	IN+, IN-	Industrial	9.1	8.4	-	-	-40	125	SO-8
STGAP2SiCSC	26	UVLO, Miller Clamp, Shutdown protection	Thermal shutdown	4	IN+, IN-	Industrial	9.1	8.4	-	-	-40	125	SO-8
STGAP2SiCD*	26	UVLO, Separated outputs, Miller Clamp, Shutdown protection	Thermal shutdown	4	IN+, IN- SD, BRAKE	Industrial	9.1	8.4	-	-	-40	125	SO-36 4 pin left
STDRIVEG600*	21	UVLO, Separated outputs, Interlocking function	Bootstrap diode	5.5	HIN, LIN, SD	Industrial	4.5	4.2	-	-	-40	125	SO-16

Note: * Short to come

Evaluation Boards

Here is a list of the most commonly used evaluation boards. For a full list of available boards and tools, please visit **www.st.com**.

Order code	Supply Voltage (V) max	Package
EVAL6393	L6393D	600 V full-bridge reference design featuring L6393; suitable for FANs and DC motors control
EVAL6491HB	L6491D	Evaluation board for L6491 gate driver
EVALSTGAP1S	STGAP1AS	Evaluation board for STGAP1S galvanically isolated 1.5 kV gate driver
STEVAL-IHM021V2	L6390D	100 W 3-phase inverter reference design for FOC controlled PMSM, based on L6390 advanced half bridge gate driver and MOSFET
STEVAL-IHM023V3	L6390D	1 kW 3-phase reference design for single shunt FOC controlled PMSM, based on L6390 advanced half bridge gate driver and IGBT
STEVAL-IHM032V1	L6391D, L6392D	150 W 3-phase inverter reference design for FOC and trapezoidal control: based on L6391 and L6392 advanced half-bridge gate drivers and IGBT
EVALSTGAP2HS	STGAP2HSM STGAP2HSCM	Half-bridge configuration to evaluate 2 sample of STGAP2HSM or STGAP2HSCM
EVALSTGAP2SICS	STGAP2SiCS STGAP2SiCSC	Half-bridge configuration to evaluate 2 sample of STGAP2SiCSM or STGAP2SiCSCM
EVALSTDRIVE601	STDRIVE601	Demonstration board for STDRIVE601 triple gate driver
EVALSTDRIVE101	STDRIVE101	Demonstration board for STDRIVE101 triple gate driver up to 20 A load

STEVAL-IHM032V1

EVALSTGAP2HS

EVAL6491HB

In many cases, several evaluation tools are associated to one single part number. This is the case of our STDRIVE101 triple half-bridge gate driver, where the EVALSTDRIVE101 evaluation board is connected in a multiple configuration.

Evaluation software

USB

NUCLEO-F303RE

EVALSTDRIVE101

STM32 ECOSYSTEM FOR MOTOR CONTROL

STM32 microcontrollers offer the performance of the industry-standard Arm® Cortex®-M cores running Field Oriented Control (FOC) modes, widely used in high-performance drives for air conditioning, home appliances, drones, building and industrial automation, medical and e-bike applications. STM32 MC SDK (motor control software development kit) firmware (X-CUBE-MCSDK) includes the permanent-magnet synchronous motor (PMSM) firmware library and the STM32 Motor Control Workbench to configure the firmware library parameters through its graphical user interface. STM32 Motor Control Workbench is PC software that reduces the design effort and time needed for the firmware configuration: the user generates a project file through the GUI and initializes the library according to the application needs. Some of the variables of the algorithm being used can be monitored and changed in real time.

Motor control type supported by the STM32 and STM8 Motor control ecosystem

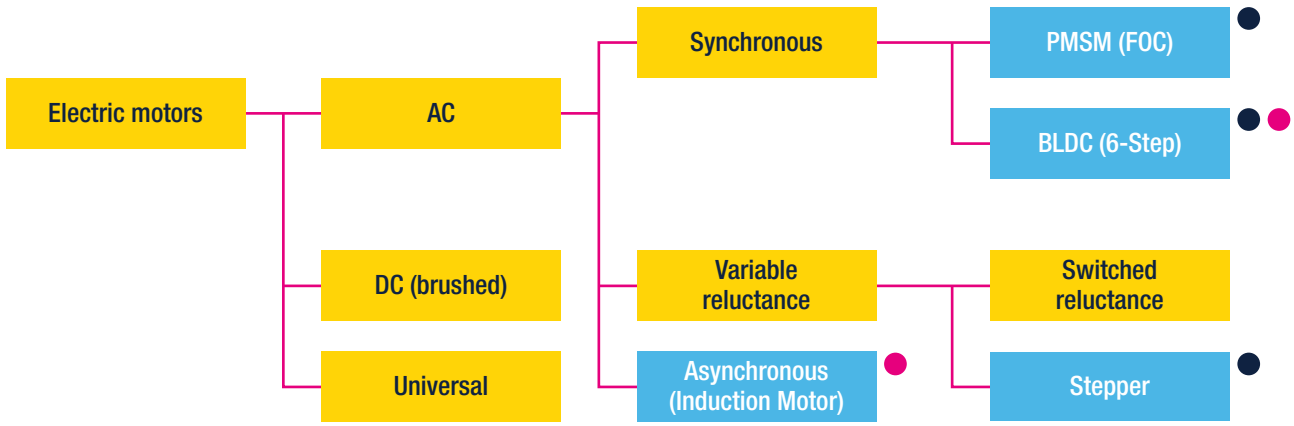

● Solutions compatible with STM32 microcontrollers
● Solutions compatible with STM8 microcontrollers

Motor control Ecosystem

STM32 tools and software provide an integrated development environment to ease and support the design of motor control solutions. Learn more on **st.com/stm32-motor-control**

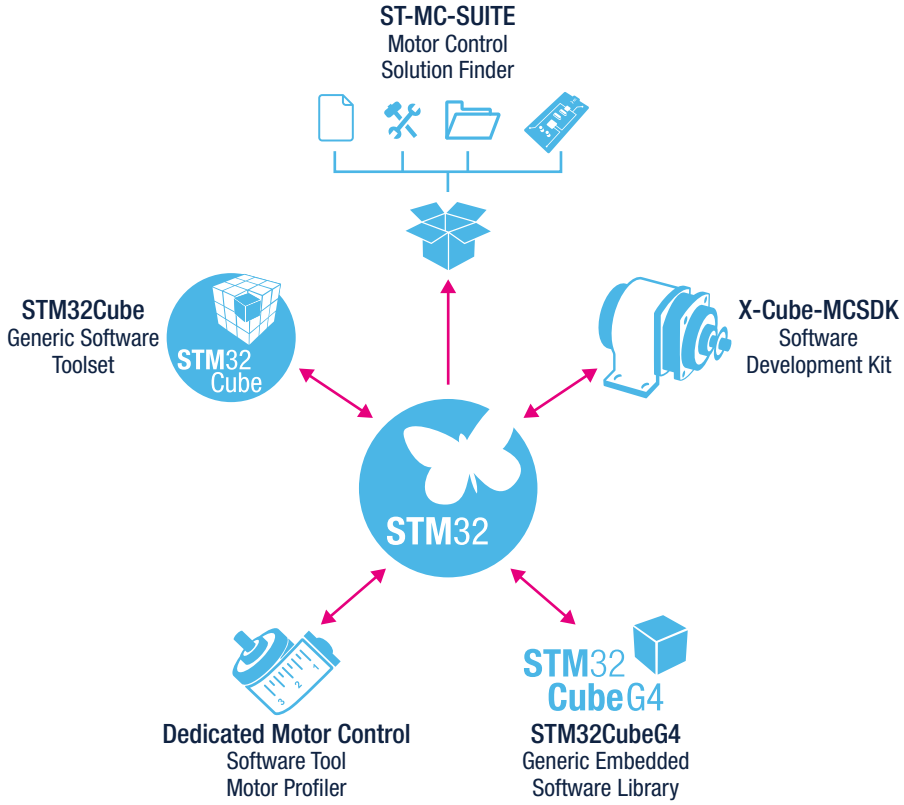

Product key features to enable Motor Control

The Motor Control Library included in X-CUBE-MCSDK (today available for PMSM/BLDC motors) enables the features listed in the following table.

STM32 series		F0	F1	F3	F4	F7	L4	G0	G4	STSpin32F0
Current sensing and over current protection OCP	Current 1-shunt or 3-shunt	•	•	•	•	•	•	•	•	•
	Insulated Current Sensing		•	•	•	•			•	
	Embedded comparators OCP, Op Amps			•					•	
Speed/Position sensing	Sensor (Hall, Encoder)/Sensor-less	•	•	•	•	•	•	•	•	•
Bus Voltage sensing/protection UVP/OVP	V_{bus} reading, Over and Under voltage protection	•	•	•	•	•	•	•	•	•
FOC	Single	•	•	•	•	•	•	•	•	•
	Dual (couple ADCs per motor)			•	•				•	
	Dual (sharing ADC resources for both motors)			•	•					
Control mode	Torque/Speed/Position control	•	•	•	•	•	•	•	•	•
Other features	MTPA, Flux weakening, Feed Forward	•	•	•	•	•	•	•	•	•
	PFC – FW support		•	•						

IGBTs, POWER MOSFETs AND SiC MOSFETs

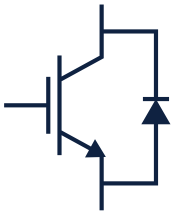

IGBTs AND POWER MOSFETs

ST's portfolio of Insulated Gate Bipolar Transistors (IGBT) contains a comprehensive range of devices based on various process technologies with breakdown voltages from 300 to 1250 V and higher, offered as bare dice and/or as discrete components. Our technology portfolio:

- Planar punch-through (PT) IGBTs
- Automotive-grade IGBTs (AEC-Q101)
- Trench-gate field-stop (TFS) IGBTs

ST's IGBTs feature the best trade-off between conduction and switch-off energy loss tailored for different applications:

- General-purpose inverters
- UPS
- Automotive
- Motor control
- Welding and induction heating
- Home appliances
- Solar inverters

Naming convention for trench-gate field-stop (TFS) products:

STG WA 50 M 65 D F 2 AG

Available package

B	D²PAK
D	DPAK
H...-2	H2PAK
F	TO-220FP
FW	TO-3PF
P	TO-220
W	TO-247
WA	TO-247 long Leads
WT	TO-247-4
YA	Max247 Long Leads

Nominal Device Current

IGBT series

H	600 V, Medium speed (8 ÷ 30 kHz)
H...B(2)	High speed (16 ÷ 60 kHz)
HP...B(2)	H...B(2) with protection diode
V	Very high speed (50 ÷ 100 kHz)
M	Low loss (2 ÷ 20 kHz)
S	Low drop (up to 8 kHz)
H	1200 V, High speed (20 ÷ 100 kHz)
IH	Soft switching (16 ÷ 60 kHz)

Breakdown voltage ÷ 10

Qualification

AG	Automotive grade
Blank	Industrial grade

Technology Generation

F	Trench gate field stop technology

DIODE Options

D	Very fast recovery
DH	Half-rated diode
DL	Low forward voltage for soft-switching applications only

Improve your application efficiency with TO247-4 package: separating emitter pin into driving emitter (kelvin) and power emitter, this new package will reduce parasitic stray inductance contribution, with a great benefit in turn on switching losses, as shown in the diagram below (**STGW50H65DFB2-4**, turn-on switching comparison, 3 vs 4 leads configuration).

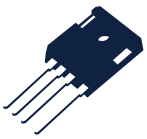

E_{ON} vs I_C between 3 Leads and 4 Leads in 50 A device

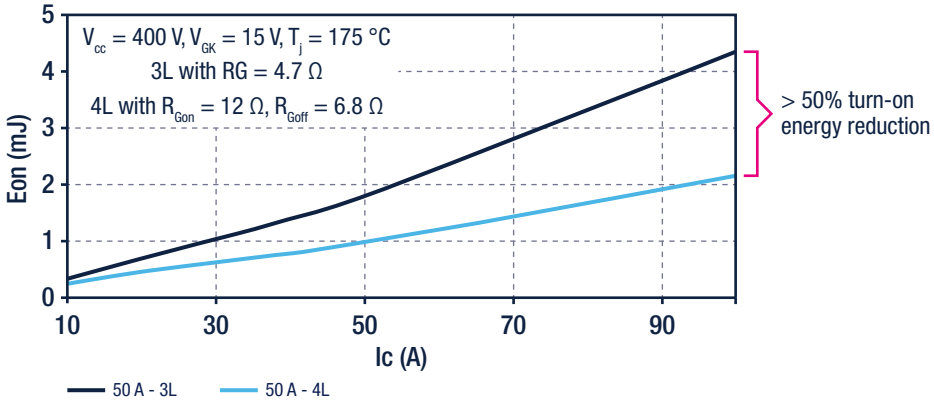

TO247-4 products:

IGBT P/N	BV_{CES}	I_{CN}	$V_{CE(sat)}$ @ I_{Cnom}	E_{off} @ I_{Cnom}	E_{on} @ I_{Cnom}	R_{th}	FRD Option
	(V)	(A)	(V)	(mJ)	(mJ)	°C/W	
STGW50H65DFB2-4	650	50	1.55	0.48	0.63	0.55	Very Fast
STGW75H65DFB2-4		75	1.55	0.77	0.99	0.42	Very Fast
STGW100H65FB2-4		100	1.55	1.14	1	0.34	-

For further information about our IGBT product portfolio, visit www.st.com/IGBT or download our IGBT Finder smartphone app:

Download on the App Store

GET IT ON Google Play

ST's offering of power MOSFETs includes hundreds of devices. The naming convention below highlights the diversity of our portfolio with its different packages and our latest silicon technologies.

ST	x	20	N	95	y	K5

Package

R	SOT-23
T	SOT-23-6L
N	SOT-223
S	SO-8
D	DPAK ("D..T4" for older P/N)
L	PowerFLAT™ 2x2; 3.3x3.3; 5x5; 5x6; 8x8
LD	PowerFLAT™ dual side cooling
B	D^2PAK ("B..T4" for older P/N)
E	ISOTOP®
F	TO-220FP
FH	TO-220FP wide creepage
FI	I^2PAKFP
FU	TO-220FP narrow leads
FW	TO-3PF
H	H^2PAK-2 H^2PAK-6
I	I^2PAK
K	LFPAK
O	TO-LL
P	TO-220
Q	TO-92
U	IPAK (-S for short leads)
V	PowerSO-10™
W	TO-247 (-4 for 4 leads)
WA	TO-247 long leads
Y	Max247®

Indicative current range

Breakdown voltage ÷ 10 (with the exception of non 10 multiples)

Channel polarity

N	N-channel
P	P-channel
N...N	Two different N-channel dice
N...P	Complementary pair
DN or DP	Dual N-Ch or dual P-Ch
NS or PS	N-Ch or P-Ch plus Schottky Diode (electrically connected, monolithic included)

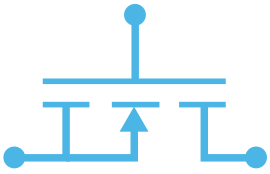

Technology

H5	STripFET™ H5 (12 V, 30 V)
H6	STripFET™ H6 (-30 V, 30 V)
H7	STripFET™ H7 (-20 V, 30 V)
F3	STripFET™ F3 (40 V to 100 V)
F5	STripFET™ F5 (40 V)
F6	STripFET™ F6 (-100 V to 80 V)
F7	STripFET™ F3 (40 V to 120 V)
M2	MDmesh™ M2 (400 V to 650 V)
DM2	MDmesh™ DM2 Series ≥ 400 up to 650 V
M2-EP	MDmesh™ M2 EP (650 V)
M6	MDmesh™ M6 (≥ 650 V up to 700 V
M5	MDmesh™ M5 (550 V, 650 V)
K3	SuperMESH™ K3 ≥ 400 V
K5	MDmesh™ K5 (800 V to 1500 V)
DK5	MDmesh™ DK5 (≥ 950 V up to 1050 V)

Special features

C	Current sensing
D	Fast recovery diode
L	Logic level 5 V drive optimized
LL	Logic level 4.5 V drive optimized
T	Temperature sensing
V	Super logic level (2.5 V - 2.7 V drive)
U	Ultra logic level (1.8 V drive)
Z	Clamped by Zener diode (33 V)

Based on the advanced and innovative properties of wide bandgap materials, ST's silicon carbide (SiC) MOSFETs feature very low $R_{DS(on)}$* area for the 1200 V rating combined with excellent switching performance, translating into more efficient and compact systems. Compared with silicon MOSFETs, SiC MOSFETs exhibit low on-state resistance* area and excellent switching performances versus the best-in-class 1200 V IGBTs in all temperature ranges, simplifying the thermal design of power electronic systems.

The main features and benefits of our SiC MOSFETs include:

- Very high temperature handling capability (T_{jmax} = 200 °C) leading to reduced PCB form factors (simplified thermal management) as well as improved system reliability
- Significantly reduced switching losses (minimal variation versus temperature) resulting in more compact designs (with smaller passive components)
- Low on-state resistance (80 mΩ typical at 25 °C) resulting in higher system efficiency (reduced cooling requirements)
- Simple to drive (cost-effective network driving)
- Very fast and robust intrinsic body diode (no need for external freewheeling diode, thus more compact systems)

Part number	V_{DSS} (V)	I_{Dmax} (A) (@ 25 °C)	$R_{DS(on)}$ (max (Ω) (@ V_{GS} = 20 V)	Total gate charge Qg typ (nC)	T_{jmax} (°C)	Package
SCT10N120	1200	12	0.69	22	200	HiP247™
SCT20N120	1200	20	0.239	45	200	HiP247™
SCT30N120	1200	45	0.1	105	200	HiP247™
SCT50N120	1200	65	0.069	122	200	HiP247™
SCTWA50N120	1200	65	0.069	122	200	HiP247™ Long Leads
SCTW90N65G2V	650	119	0.018	157	200	HiP247™
SCTWA90N65G2V	650	119	0.018	157	200	HiP247™ Long Leads
SCTH90N65G2V-7	650	119	0.018	157	175	H2PAK-7
SCTW35N65G2V	650	45	0.055	73	200	HiP247™
SCTWA35N65G2V	650	45	0.055	73	200	HiP247™ Long Leads
SCTH35N65G2V-7	650	45	0.055	73	175	H2PAK-7
SCTW70N120G2V	1200	80	0.025	150	200	HiP247™
SCTH70N120G2V-7	1200	80	0.025	150	175	H2PAK-7
SCTW40N120G2V	1200	45	0.07	61	200	HiP247™
SCTWA40N120G2	1200	45	0.07	61	200	HiP247™ Long Leads
SCTH40N120G2V-7	1200	45	0.07	61	175	H2PAK-7
SCTW60N120G2	1200	60	0.04	101	200	HiP247™
SCTH60N120G2-7	1200	60	0.04	101	175	H2PAK-7
SCT1000N170	1700	6	1	11	200	HiP247™
SCTWA1000N170	1700	6	1	11	200	HiP247™ Long Leads
SCT20N170	1700	25	0.064	101	200	HiP247™
SCTWA20N170	1700	25	0.064	101	200	HiP247™ Long Leads

POWER MODULES

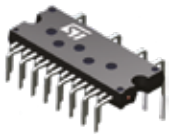

Intelligent Power Modules

The SLLIMM (small low-loss intelligent molded module) families of compact, high efficiency, dual-in-line Intelligent Power Modules (IPM), ensure optional extra features. They provide a high-integrated level that means simplified circuit design, reduced BOM, smaller weight, and high reliability. Both packages (fully molded and DBC) and leads (through-hole and SMD), SLLIMM series can combine six power switches (IGBT, MOSFET and SJ-MOSFET) and drivers in an inverter configuration assuring the best compromise between conduction and switching energies with an outstanding robustness and EMI behavior, thus enhancing the efficiency of 3-phase inverter and any motor drives working up to 20 kHz in hard-switching circuitries and for an application power range from 10 W to 3 kW.

SLLIMM nano SMD	SLLIMM nano	SLLIMM nano 2nd series	SLLIMM 2nd series	SLLIMM HP*
600 V IGBT 500 V MOSFET 1 up to 3 A	600 V IGBT 500 V MOSFET 1 up to 3 A	600 V IGBT 600 V SJ-MOSFET 3 up to 8 A	600 V IGBT 600 V SJ-MOSFET 8 up to 35 A	IGBT 650 V, 50 A 1200 V, 10 A
				
NSDIP-26L (SMD) 12.45 x 29.15 x 3.10 mm	NDIP-26L (TH) 12.45 x 29.15 x 3.10 mm	N2DIP-26L (TH) 12.45 x 32.15 x 4.10 mm	SDIP2F-26L SDIP2B-26L 24 x 38 x 3.5 mm	SDIPHP-30L 31x 52 x 5.6 mm
Power rating: 10 W ÷ 70 W	Power rating: 70 W ÷ 100 W	Power rating: 100 W ÷ 500 W	Power rating: 500 W ÷ 3 kW	Power rating: 2.5 kW ÷ 5 kW

Note: * In development

ACEPACK™ Power Modules

ACEPACK™ (Adaptable Compact Easier package) product portfolio is conceived to address industrial applications such as industrial motor drives, solar panels, welding and power management solutions (DC-DC, AC-DC converters for UPS, charger, etc.).

On top of the current product portfolio, a new family, integrating the new silicon carbide technology, is under development.

ACEPACK power modules family is available to address mainly industrial applications such as industrial motor drives, solar panels, welding and power management solutions (DC-DC, AC-DC converters for UPS, chargers, etc.).

Two packages, ACEPACK™ 1 and ACEPACK™ 2 have been introduced, both with Six-pack and converter inverter brake (CIB) topologies.

For industrial drive applications a complete system has been developed, the STEVAL-HKI001V2 evaluation board, to demonstrate the capabilities of the A2C35S12M3-F IGBT power module for motor control applications.

A new evaluation board family, called ACEPACK CARDS, which hosts the ST power modules is going to be released, These power boards combined with ST Motor Control ecosystem enable cost effective and easy to use solutions based on ST power modules for industrial applications.

ACEPACK™1

ACEPACK™2

DIODES AND SiC RECTIFIERS

ST offers Schottky and ultrafast rectifier solutions for all market requirements. ST's latest developments include our M series, based on Schottky technology, with improved avalanche rating and the integration of higher currents in 1 mm thick packages, such as SOD-123F, SOD-128F, PSMC, SMA Flat, and SMB Flat.

Our range of small signal Schottky diodes with flip-chip packages helps meet the most stringent space saving requirements, especially for portable communication equipment. For high-efficiency rectification or freewheeling functions, our new field-effect rectifier diodes, the FERD family improve the power density capability of converters.

For power converter applications where silicon diodes reach the limits of their operating temperature and power density, ST offers the low VF and high surge series of silicon carbide rectifiers.

AEC-Q101 automotive-grade qualified diodes and rectifiers >

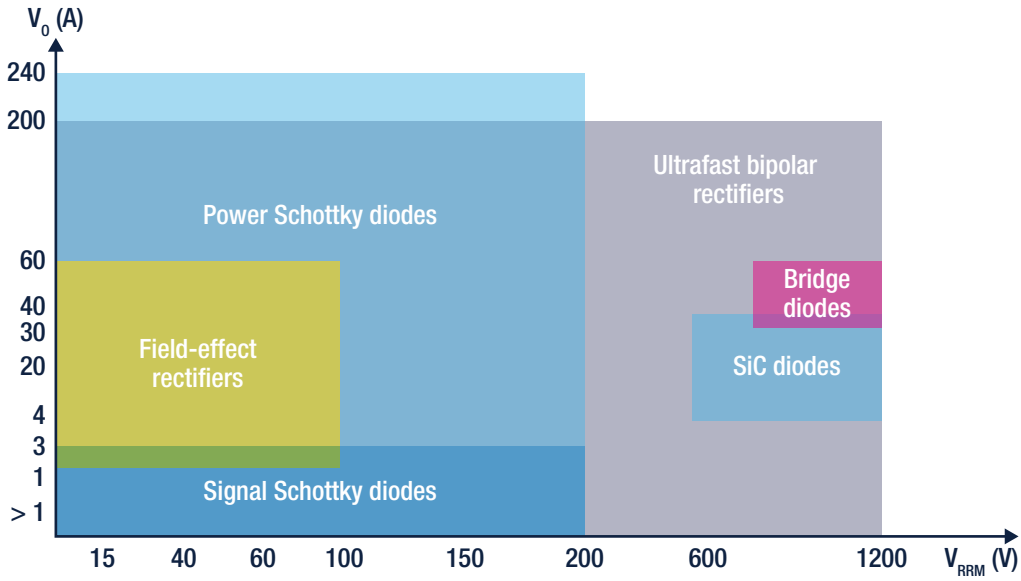

ST's silicon-carbide diodes take advantage of SiC's superior physical characteristics over silicon, with 4 times better dynamic characteristics and 15% less forward voltage (VF).

Their low reverse recovery characteristics make ST's SiC diodes a key contributor to energy savings in SMPS applications and in emerging domains such as solar energy conversion, EV or HEV charging stations, and other applications such as welding equipment and air conditioners.

ST's SiC product portfolio is now up to 40 A at 650 V and in the range from 6 to 20 A at 1200 V, housed in DPAK HV and TO-220AC packages.

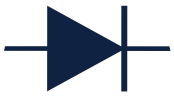

SiC

THYRISTORS AND AC SWITCHES

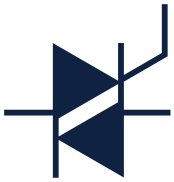

For low-power industrial applications (current rating < 25 A), ST has developed overvoltage-protected AC switches, high-temperature H series TRIACs and high-voltage operation TRIACs and alternistors.

Every application needs the right TRIAC or AC switch. The following table provides ST's recommended series for industrial applications and not only:

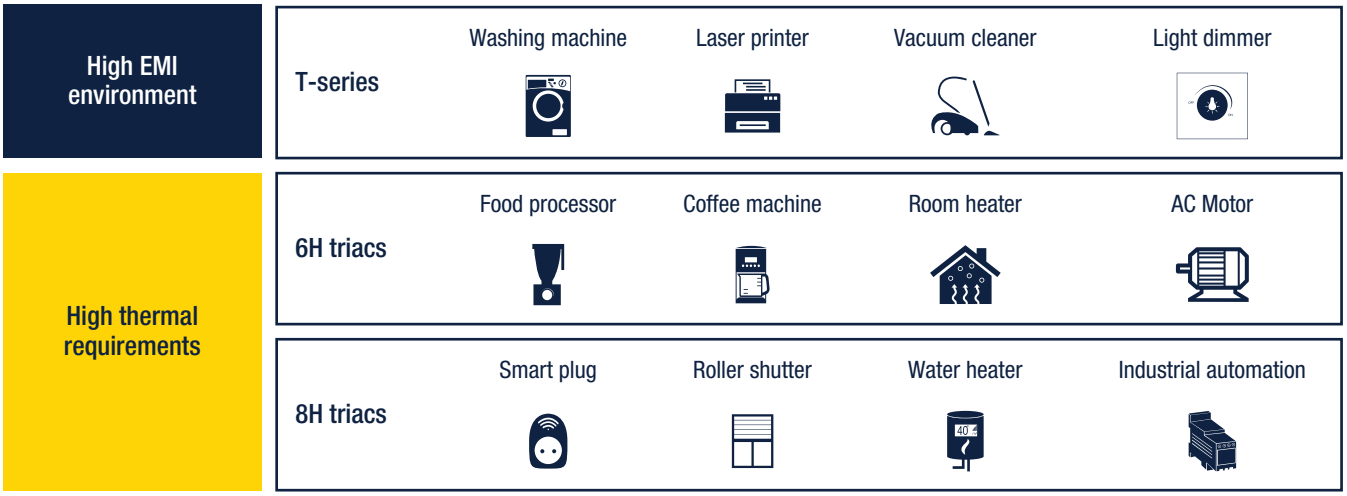

ACST AC switch: Overvoltage protection and high application robustness

The ACST series, with integrated overvoltage crowbar protection and snubberless™ operations, eliminates the need for additional external protection to support IEC 61000-4-4 and IEC 61000-4-5 standards (Control Board Compliance). It makes for easier design, smaller boards and therefore more cost-effective projects.

The ACST AC switches can handle surges of 2000 V with a clamping voltage (V_{CL}) of 850 V.

Part number	Package				I_T (RMS) (A)	V_{DRM}/V_{RRM} (V)	I_{GT} (mA)	dV/dt (V/µs) (125 °C/150 °C)	(dI/dt)c (A/ms) (125 °C/150 °C)	T_{jmax} (°C)
	TO-220AB	TO-220AB Ins.	DPAK	D²PAK						
ACST435-8	FP		B		4	800	35	1000	5	125
ACST610-8	FP	T		G	6	800	10	500	3.5	125
ACST830-8	FP	T		G	8	800	30	2000	8	125
ACST1035-8	FP	T			10	800	35	4000/2000	10/5	150
ACST1235-7		T		G	12	700	35	2000	14	125
ACST1235-8	FP				12	800	35	4000/2000	12/6	150
ACST1635-8	FP				16	800	35	1000/300	12/4	150

ACST SERIES YOUR DESIGN, SIMPLIFIED

- Auto-protected against AC line overvoltage surges
- Enables compliance with IEC 61000-4-4 and -4-5 disturbances
- No need for additional components (RC network, MOV)
- Easy control board design

H Series TRIACs: High Temperature and High Application Robustness

The H Series TRIACs are specified for a maximum junction temperature of 150 °C. They are particularly suited to hot environments and to PCB designs requiring high power density, with a current rating up to 30 A. They are available in D²PAK and TO-220 packages.

These "No Compromise, no nonsense" devices offer high thermal cycling performance and high turn-off commutation capability, making them the most rugged range of TRIACs in the industry.

All the part numbers listed in the following table operate at T_{jmax} = 150 °C.

Part number	Package			I_T (RMS) (A)	V_{DRM}/V_{RRM} (V)	I_{GT} (mA)	dV/dt (V/µs) 150 °C	(dI/dt)c (A/ms) 150 °C
	TO-220AB	TO-220AB Ins.	D²PAK					
T835H-6	T	I	G	8	600	35	1000	11
T850H-6	T	I	G	8	600	50	1500	14
T1035H-6	T	I	G	10	600	35	1000	13
T1050H-6	T	I	G	10	600	50	1500	18
T1235H-6	T	I	G	12	600	35	1000	16
T1250H-6	T	I	G	12	600	50	1500	21
T1635H-6	T	I	G	16	600	35	1000	21
T1650H-6	T	I	G	16	600	50	1500	28
T2035H-6	T	I	G	20	600	35	1000	27
T2050H-6	T	I	G	20	600	50	1500	36
T3035H-6	T	I	G	30	600	35	1000	33
T3050H-6	T	I	G	30	600	50	1500	44
T1635H-8	T	I	G	16	800	35	2000	16
T2035H-8	T	I	G	20	800	35	2000	20
T3035H-8	T	I	G	30	800	35	2000	25

H SERIES NO COMPROMISE, NO NONSENSE

- High reliability
- High turn-off performance
- High noise immunity
- High current density
- High current surge performance
- Heatsink reduction
- Surface Mount Design compatible D²PAK

High-voltage TRIACs: 1200 V capability and high application robustness

The new T2550-12 TRIAC has been designed for industrial applications such as 3-phase motor soft-starters, contactors and protectors, with the market's first 25 A, 50 mA, 1200 V

TRIAC. Thanks to its high current robustness (withstands 6 million cycles of repetitive inrush current at 50 A), the T2550-12 prolongs the lifetime and extends the current rating of 3-phase motor starters and controllers. In its D²PAK package variant, it allows a more compact design compared to mechanical contactors.

Part number	Package	I_T (RMS) (A)	V_{DRM}/V_{RRM} (V)	I_{GT} (mA)	dV/dt (V/µs) 125 °C	(dI/dt)c (A/ms) 125 °C	T_{jmax} (°C)
1200 V low-sensitivity industrial TRIACs							
T2550-12G	D2PAK	25	1200	50	2500	20	125
T2550-12T	TO-220AB	25	1200	50	2500	20	125
T2550-12I	TO-220AB Ins.	25	1200	50	2500	20	125
1200 V alternistors							
TXDV1212	TO-220AB Ins.	12	1200	100	2000	15	125
TPDP1225	TOP3 Ins.	25	1200	150	2000	20	125
TPDV1240	TOP3 Ins.	40	1200	200	200	35	125

T1225-12G SMD TRIAC FOR 1200 V APPLICATIONS

- Compact D²PAK package
- Robust turn-off commutation
- Outstanding immunity performance

SCR thyristors

ST is proud to offer the most innovative silicon-controlled rectifier (SCR) portfolio for industrial applications. Indeed, ST is the first to offer a sensitive SCR with 1250 V surge capability (TS110) as well as fully qualified automotive-grade SCR for medium power (**TN6050HP-12WY**).

High surge capability SCR TS110

The TS110 is a unique offering for industrial automation. Thanks to highly sensitive triggering levels, it is suitable for circuit breaker applications where the available gate current is limited. Such applications include GFCI (ground fault circuit interrupter), AFCI (arc fault circuit interrupter), RCD (residual current device), and RCBO (residual current circuit breaker with overload protection).

The 1250 V surge voltage capability of the TS110 enables high robustness of the whole circuit breaker. The low leakage current of the TS110 reduces power consumption over the entire lifetime of the circuit breaker.

Part number	Package			I_T (RMS) (A)	V_{DRM}/V_{RRM} (V)	I_{GT} (µA)	dV/dt (V/µs) 125 °C	T_{jmax} (°C)
	TO-92 "GAK"	TO-92 "KGA"	SMBflat-3L					
X0115MUF			UF	1	600	150	80	125
TS110-8	A1	A2	UF	1.25	800	100	200	125

TS110
ULTIMATE CIRCUIT BREAKER SCR

- Resists to applicative 5 kV surge & 4 kV burst tests
- Directly driven by RCD – AFCI circuit
- Low losses of the circuit breaker
- High surge current: 25 A – 10 ms

High-temperature SCR thyristors

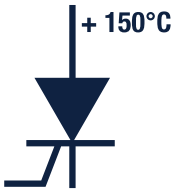

Our high-temperature SCR series work at T_{jmax} = 150 °C. It is ideal, whether for mixed bridges in motor drive boards or for AC switch operations above 35 A (I_T (RMS)). The high-temperature SCR thyristor series is available in through-hole (for legacy designs) and SMD (for modern, compact designs) packages.

TN3050H-12GY, TN3050H-12WY and TN6050HP-12WY are fully qualified automotive-grade devices at T_j = 150 °C (AGAC).

Part number	Package					I_T (RMS) (A)	V_{DRM}/V_{RRM} (V)	I_{GT} (mA)	dV/dt (V/µs) 150 °C	T_{jmax} (°C)
	TO-220AB	TO-220FPAB	TO-247	D²PAK	D³PAK					
TN1205H-6	T			G		12	600	5	100	150
TN6050HP-12WY			WY			60	1200	50	1000	150
TN1605H-6		FP				16	600	5	200	150
TN1610H-6	T	FP				16	600	10	1000	150
TN2015H-6	T	FP				20	600	15	750	150
TN3050H-12			WY*	GY*		30	1200	50	1000	150
TN4015H-6	T			G		40	600	15	500	150
TN5050H-12			WY*			60	1200	50	1000	150
TM8050H-8			W		D3	80	600	50	1000	150

TN3050H-12GY:
FIRST MEDIUM-POWER D²PAK AUTOMOTIVE SCR

- AGAC certified
- 150°C operating junction temperature
- 1200 V (direct, reverse)
- Reduced stand-by losses, lower leakage
- Compact cooling system

POWER MANAGEMENT ICs

Focus on AC/DC converters

ST's high-voltage AC-DC converters combine an advanced pulse width modulation (PWM) controller with a high-voltage power MOSFET in a single package. This makes them ideally suited for offline switch mode power supplies (SMPS) with output power spanning from a few to a few tens of watts.

The VIPerPlus series (VIPer0P, VIPer122, VIPer222 and VIPer*1, VIPer*5, VIPer*6, VIPer*7, VIPer*8 families) features an 800 V avalanche-rugged power MOSFET and leading-edge PWM controller and consumes less than 4 mW for VIPer0P, 10 mW for VIPer*1 and 30 mW in standby for the others. It also comes with the largest choice of protection schemes and supports different topologies.

The VIPer26K belongs to VIPer*6 family and integrates a 1050 V avalanche-rugged power MOSFET, suitable for cost effective 1-phase/3-phases smart meters, industrial systems and lighting power supplies.

The Altair series has a built-in 800/900 V avalanche-rugged power MOSFET and a PWM controller specifically designed to work in constant-current/constant-voltage primary-side regulation (PSR-CC/CV). It means opto-less implementation, thus significantly reducing component count.

VIPerPlus

SUPPORTED TOPOLOGIES

- Isolated
  - Regulation with optocouplerusing all ICs
  - PSR-CV (VIPer0P, VIPer*1, VIPer*6)
  - PSR-CC/CV with high accuracy (ALTAIR)
- Non isolated MOSFET for high robustness
  - Flyback with direct feedback, buck, buck-boost (VIPer0P, VIPer*1, VIPer*6)

VIPERPLUS & ALTAIR

PWM controller + HV power MOSFET in the same package

- Up to 1050V AR MOSFET for high robustness
- Extreme-low consumption
- High integration level for minimal BoM
- Flexible and easy to use

Differentiators - Find the plus for your application

Quasi-resonant			VIPerPlus series 5				
Jittered frequency (30, 60 or 115/120 kHz)	VIPerPlus0P	VIPerPlus series 1		VIPerPlus series 6	VIPerPlus series 7	VIPerPlus series 8	VIPerPlus series x22
Brown-out protection (settable)			VIPerPlus series 5		VIPerPlus series 7		
Low input voltage (18 VDC)		VIPerPlus series 1					
Extra power timer (peak power)						VIPerPlus series 8	
Double-level OCP			VIPerPlus series 5		VIPerPlus series 7	VIPerPlus series 8	
Feed forward compensation			VIPerPlus series 5				
Embedded E/A 3.3 V, 1.2 V (V*1 & V0P)	VIPerPlus0P	VIPerPlus series 1		VIPerPlus series 6			VIPerPlus series x22
Floating E/A ground (for easy negative output setting)	VIPerPlus0P						
Self-supply option (remove auxiliary winding)	VIPerPlus0P	VIPerPlus series 1		VIPerPlus series 6			VIPerPlus series x22
Wide range V_{CC} (4.5 to 30 V)	VIPerPlus0P	VIPerPlus series 1					VIPerPlus series x22
V_{CC} protection	VIPerPlus0P	VIPerPlus series 1		VIPerPlus series 6			VIPerPlus series x22
Flux runaway protection (for low start up peak current)	VIPerPlus0P	VIPerPlus series 1					
Zero power mode (ZPM)	VIPerPlus0P						
Input OVP (Overvoltage protection)		VIPerPlus series 1					
Output OVP (Overvoltage protection)		VIPerPlus series 1	VIPerPlus series 5		VIPerPlus series 7	VIPerPlus series 8	
Input UVP		VIPerPlus series 1					
PWM current mode using optocoupler VIPerPlus series 1Cycle-by-cycle OCP Light load management (Burst mode/PFM) Soft start up Thermal shutdown Short-circuit protection Automatic restart after fault	VIPerPlus0P 10 mW 4 mW (ZPM)	VIPerPlus series 1 10 mW	VIPerPlus series 5 30 mW	VIPerPlus series 6 30 mW	VIPerPlus series 7 30 mW	VIPerPlus series 8 30 mW	VIPerPlus series x22 40 mW

Focus on DC/DC converters

DC-DC converters for industrial buses offer a wide choice of input voltage ranges and features.

Our broad portfolio of ICs is composed of highly-specialized products to meet every market requirement and power management needs: high voltage technology, together with high reliability and robustness for industrial applications.

L6983 – 38 V 3 A

With a wide input-voltage range from 3.5 V to 38 V, L6983 converter is an efficient and flexible solution for 12 V and 24 V industrial bus-powered systems. This new synchronous DC/DC converter maintain high efficiency at all loads with a maximum value of 95% and have extremely low quiescent current of just 17 µA.

Low current consumption (L6983C) and low-noise (L6983N) variants are available in QFN 16L package.

ST has also released the **STEVAL-ISA208V1** (for the L6983C) and the **STEVAL-ISA209V1** (for the L6983N).

L7983 – 60 V 300 mA

The L7983 is the ideal solution for industrial bus-powered systems. This new synchronous DC/DC with an input-voltage range from 3.5 V to 60 V allows addressing specifications for 12 V, 24 V and 48 V bus standards. “Low Noise Mode” selection (LNM) allows to meet low noise application standard specification, while “Low Consumption Mode” selection (LCM) maximizes the efficiency at light load (10 µA Quiescient Current) with controlled output voltage ripple

Adjustable, 3.3 V and 5 V Output Voltage variants are available in DFN 10L package

Part number	Package	Input Voltage (V) min	Input Voltage (V) max	Output Current-Max (A) nom	Rectification	Quiescent current (mA)	Switching frequency (kHz)
L6983	QFPN 3 x 3 x 0.80 16L PITCH 0.50	3.5	38	3	Synchronous	0.017	200-2300
L6986	HTSSOP16	4	38	2	Synchronous	0.03	250-2000
L6986F	HTSSOP16	4	38	1.5	Synchronous	0.03	250-2000
L6986H	HTSSOP16	4	38	2	Synchronous	0.03	250-2000
L7980	DFN8 3 x 3, PowerSO-8	4.5	28	2	Asynchronous	2.4	250-1000
L7981	DFN8 3 x 3, PowerSO-8	4.5	28	3	Asynchronous	2.4	250-1000
L7985	DFN10 3 x 3, PowerSO-8	4.5	38	2	Asynchronous	2.4	250-1000
L7986	DFN10 3 x 3, PowerSO-8	4.5	38	3	Asynchronous	2.4	250-1000
L7986TA	PowerSO-8	4.5	38	3	Asynchronous	2.4	250-1000
L7983	DFN10 3 x 3	3.5	60	0.3	Synchronous	0.01	200 -2200
L7987	HTSSOP16	4.5	61	3	Asynchronous	1	250-1500
L7987L	HTSSOP16	4.5	61	2	Asynchronous	1	250-1500
L6902	SO-8	8	36	1	Asynchronous	2.5	250
ST1S03	DFN6 3 x 3	2.7	16	1.5	Asynchronous	2.5	1500
ST1S06	DFN6 3 x 3	2.7	5.5	1.5	Synchronous	1.5	1200-1800
ST1S09	DFN6 3 x 3	4.5	5.5	2	Synchronous	2.5	1200-1800
ST1S10	DFN8 4x4, PowerSO-8	2.7	18	3	Synchronous	1.5	400-1400
ST1S14	PowerSO-8	5.5	48	3	Asynchronous	2	1400
ST1S30	DFN8 4 x 4	2.7	6	3	Synchronous	2.5	1500
ST1S31	VFDFPN 8 3 x 3 x 1.0	2.8	5.5	3	Synchronous	0.63	1200-1900
ST1S32	DFN8 4 x 4	2.8	5.5	4	Synchronous	0.63	1200-1900
ST1S40	DFN8 4 x 4, PowerSO-8, SO-8	4	18	3	Synchronous	2.5	850
ST1S41	DFN8 4 x 4, PowerSO-8	4	18	4	Synchronous	1.5	850
ST1S50	DFN10 3 x 3	4	18	4	Synchronous	0.38	400-600
ST2S08B	QFN12 4 x 4	3	5.5	1.5	Synchronous	1.5	1200-1800

To fit critical requirements in sensing networks for factory automation, ST offers specific DC-DC converters such as the **SPV1040** (outdoor solar harvester with proprietary MPPT for loads up to about 3 W) and the **SPV1050** (indoor ultra-low power solar and TEG energy-harvester for any battery type and supercapacitor with embedded MPPT and LDOs for loads up to about 350 mW). The working principle of both devices is designed to extract the maximum energy from the source, while ensuring a fast and safe battery charge without shortening its lifetime

	Architecture	Harvesting Source	Target Battery	Other features	Evaluation tool
SPV1040	Boost	PV	Any type*	Over-current and Over-temperature protection, Input reverse polarity protection	STEVAL-ISV006V2, STEVAL-ISV012V1
SPV1050	Boost/Buck-Boost	PV and TEG	Any type (including supercap)	Over-voltage and under-voltage battery protection, 2 embedded LDOs (1.8 and 3.3 V)	STDES-IDS002V1, STDES-IDS003V1

Note: * CC-CV battery charger is needed to apply a lithium battery charging profile

Part Number	Maximum current (mA)	Quiscent current (µA)	Typ V_{drop} at max load (mV)	Input Voltage range (V)	PSRR typ @ 1 kHz	Noise ($µV_{RMS}$)	Package	Feature
STLQ50	50	3.5	400	2.3-12	30	560	SOT323-5L	Ultra low Iq
LDK715	85	5	500	4.3-24	45	95	SOT23-5L, DFN8 3 x 3	Ultra low Iq, High Vin
ST715	85	3.8	500	2.5-24	45	95	SOT23-5L, DFN8 3 x 3	Ultra low Iq, High Vin
LD39015	150	18	80	1.5-5.5	65	29	SOT23-5L, Flip Chip 4	High PSRR, Tiny Package
LD39115	150	20	80	1.5-5.5	74	30	Flip Chip 4	High PSRR, Tiny Package
LD59015	150	31	150	2.3-5.5	76	20	SOT323-5L	High PSRR, Low noise
LDCL015	150	120	50	1.8-5.5	52	40	SOT23-5L	Capless
LDLN015	150	35	86	2.1-5.5	92	6.3	DFN6 2 x 2	High PSRR, Ultra Low noise
STLQ015	150	1	115	1.5-5.5	40	75	SOT23-5L	Ultra low Iq
LD39020	200	20	200	1.5-5.5	80	45	SOT23-5L, DFN4 1 x 1	High PSRR, Tiny Package
LDK120	200	30	150	1.9-5.5	60	51	SOT23-5L, SOT323-5L, DFN6 1.2 x 1.3	Cost effective, Tiny Package
LDBL20	200	20	200	1.5-5.5	80	45	STSTAMPTM	High PSRR, Tiny Package
LDK220	200	55	200	2.5-13.2	55	20	SOT23-5L, SOT323-5L, SOT-89, DFN6 1.2 x 1.3	Cost effective, Tiny Package
LDK320	200	60	200	2.5-18	65	60	SOT23-5L, SOT-89	Cost effective, High PSRR
LDLN030	300	16	150	1.5-5.5	65	7.5	TSOT23-5L	High PSRR, Low noise
STLQ020	200	0.3	160	2-5.5	40	135	DFN6 2 x 2, Flip Chip 4	Ultra Low Iq, Tiny Package
LDLN025	250	12	120	1.5-5.5	65	6.5	DFN4 1x1, Flip Chip 4	High PSRR, Ultra Low noise
LD39030	300	20	300	1.5-5.5	80	45	DFN4 1 x 1	High PSRR, Tiny Package
ST730/32	300	5	600	2.5-28	75	70	SOT23-5L	Low Iq, High PSRR
LD39030SJ	300	20	200	1.5-5.5	62	30	Flip Chip 4	High PSRR, Tiny Package
LD39130S	300	1	300	1.4-5.5	70	38	DFN4 1.2 x 1.3, Flip Chip 4	Ultra Low Iq, Tiny Package
LDK130	300	30	200	1.9-5.5	60	51	SOT23-5L, SOT323-5L, DFN6 1.2 x 1.3	Cost effective, Tiny Package
LDFM	500	150	125	2.5-16	62	45	DFN6 2 x 2, DFN6 3 x 3, DPAK, PPAK	High Vin
ST1L08	800	35	70	1-5.5	80	45	DFN8 2 x 3	Ultra LDO, High PSRR
LDF	1000	150	200	2.6-16	62	45	DFN6 2 x 2, DFN6 3 x 3, DPAK, PPAK	High Vin
LD57100	1000	35	40	$V_{out}+V_{drop}$ to 5.5	86	27	Flip Chip 6b	Ultra low drop with bias
LD39100	1000	20	200	1.5-5.5	65	30	DFN6 3 x 3	Low noise, Low Iq
LDL112	1200	35	350	1.6-5.5	57	135	DFN6 2 x 2, DFN6 3 x 3, SO-8, PPAK	Low Iq, Reverse Current protection
LDL212	1200	250	350	2.5-18	70	75	DFN6 2 x 2, DFN6 3 x 3, SO-8	Cost Effective, High PSRR
LD39200	2000	100	110	1.25-6	70	45	DFN6 3 x 3, DFN8 4 x 4	Ultra LDO, High PSRR, Reverse Current protection

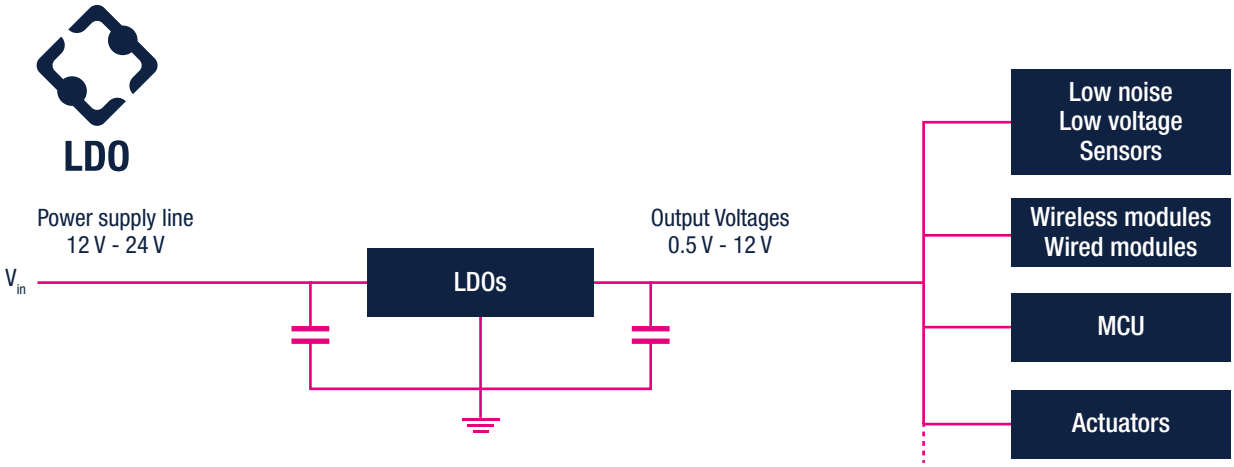

ST voltage regulators app

The ST Vreg app (ST-VREG-FINDER) is a free all-in-one smart selector for smartphones and tablets. You can select the products that fit your application needs from among our Linear and switching voltage regulators and Voltage reference portfolios.

The app includes a parametric search engine and a browser by product family, for easy sorting and filtering. Once you have made your selection, share the relevant documentation by mail or social media, check the availability of samples and order them in few clicks!

Download from the App Store or Google Play

Download on the App Store

GET IT ON Google Play

The ST Vreg Finder is available on Google Play and App Store
www.st.com/vreg-finder

ST offers a very broad portfolio of power management ICs.

For fault management, the **eFuses** replace larger conventional fuses, offering complete and flexible management of the fault (overcurrent/overvoltage), without replacement after actuation.

eFuse

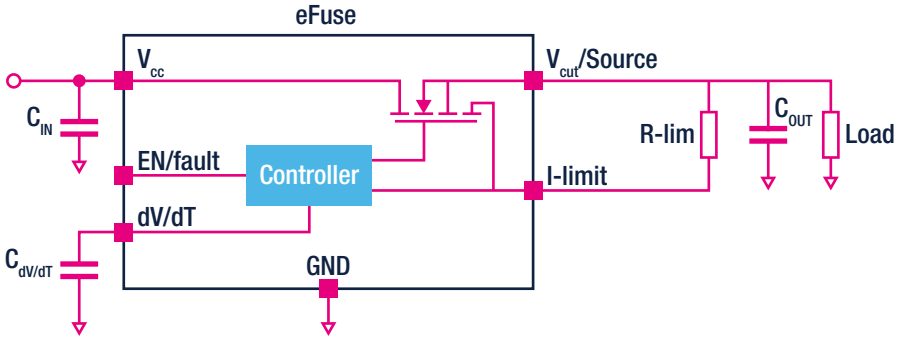

eFuses, a smart offer for a lots applications

The industrial power rail range is fully covered with the STEF01, which is usable throughout the 8 to 48 V range thanks to its programmability options.

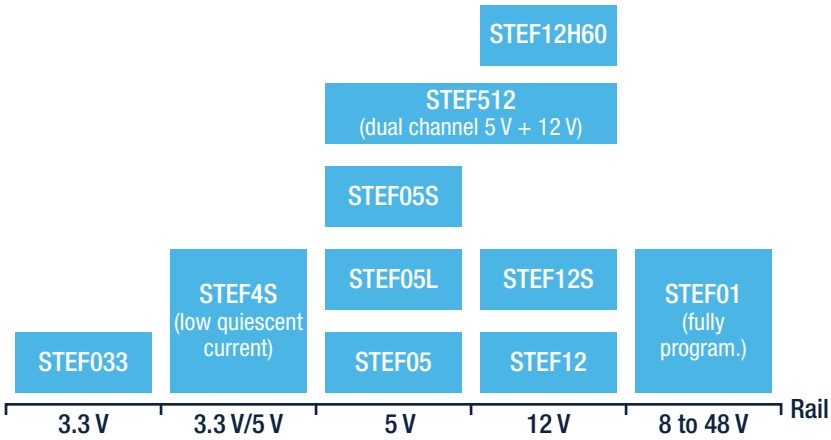

Connected in series to the power rail, ST's Power Breakers disconnect the load if power consumption exceeds a programmed limit: the integrated power switch is automatically opened and notifies the remote monitoring feature.

This approach helps optimize the design of power distribution systems, by defining and protecting with high accuracy all the low power circuits (LPC). Eventually, the power breaker enables cost savings in terms of isolation material, cable sizing and easier qualification and certification flow.

The STPW12 (12 V rails), exhibit features like:

- Auto-retry function with programmable delay
- Adj precise power limitation from 11 to 16 W
- Integrated N-channel power MOSFET
- PWM function

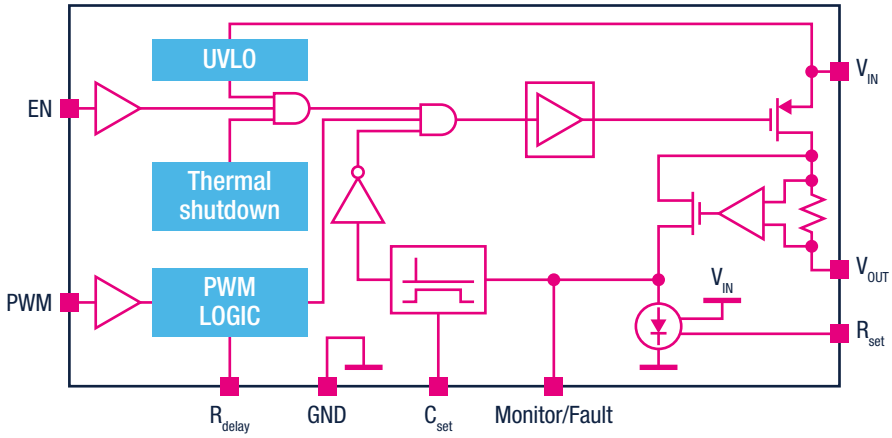

ESD AND EMI PROTECTIONS

In harsh factory automation environments, protection devices are the key to system reliability.

ST offers a wide range of protection devices dedicated to power and data lines.
More at **www.st.com/protection**

Power lines

Overvoltages and glitches appearing on power mains are modeled by the IEC 61000-4-5 international standard, also known as an 8/20 µs current waveform. Able to protect up to 500 A (8/20 µs), the STIEC45 series is the ideal surge suppressor solution for factory automation power lines.

Order code	V_{BR} @ I_R				V_{CL} @ I_{PP} 8/20 µs, 1.2/50 µs	
	Min.	Typ.	Max.		Max.	
	V			mA	V	A
STIEC45-24AS	26.7	28.2	29.5	1	42	500
STIEC45-26AS	28.9	30.3	31.9	1	45	
STIEC45-27AS	30	31.6	33.2	1	47	
STIEC45-28AS	31.1	32.6	34.3	1	49	
STIEC45-30AS	33.3	35	36.8	1	55	
STIEC45-33AS	36.7	38.6	40.6	1	59	

As well as robust and reliable performance during voltage surges, ST's discrete TVS (transient voltage suppressor) devices exhibit excellent power derating versus temperature. As an example, ST's SM15T series (1500 W, 10/1000 µs) operates at full performance up to 115 °C

Peak pulse power dissipation versus initial junction temperature (printed circuit board)

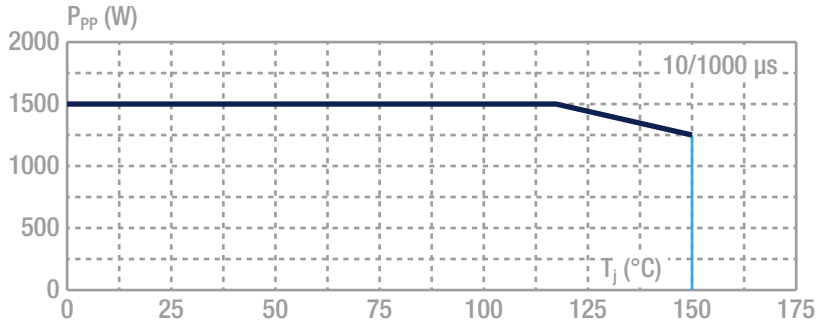

A large choice of package is available to meet application requirements.

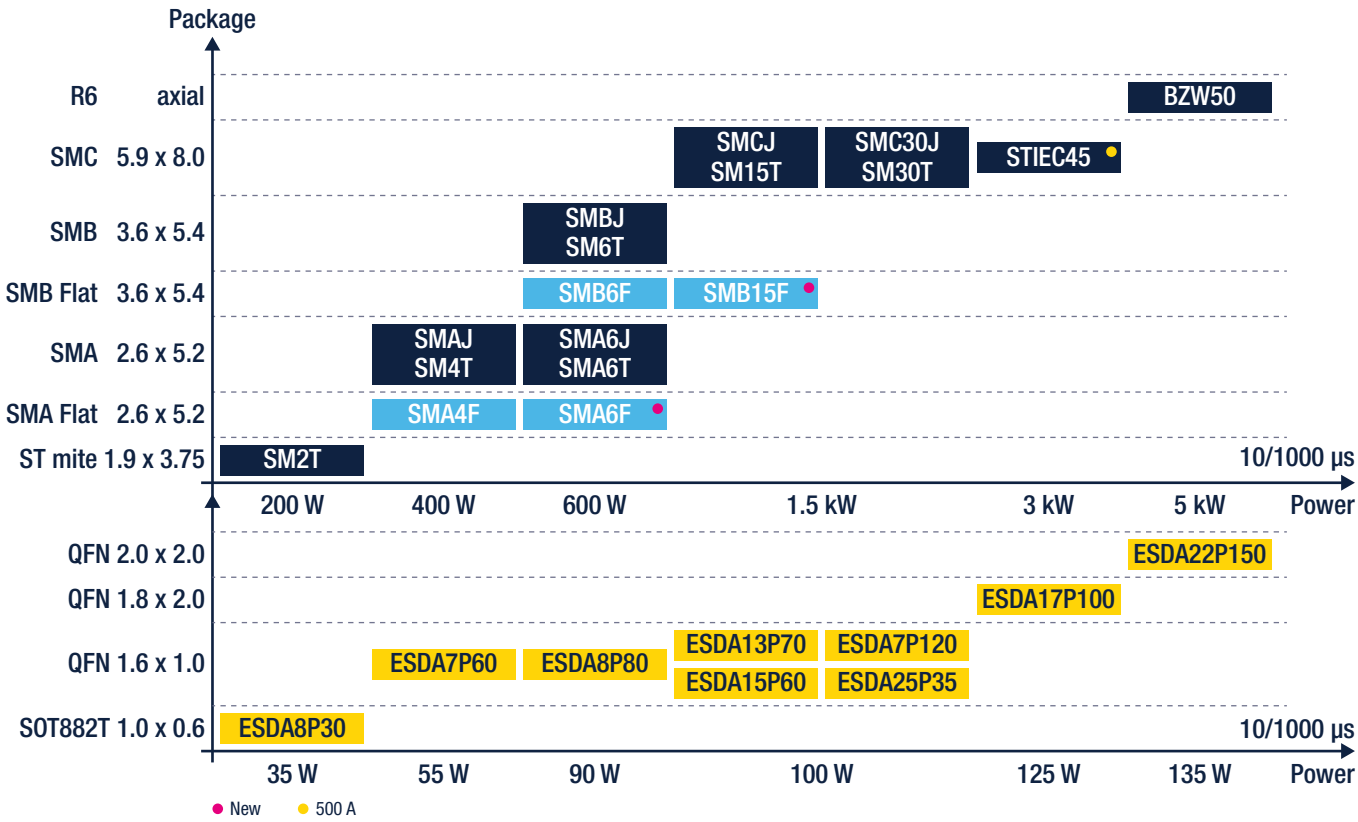

Data lines

Communication buses, with long wires lengths, are particularly sensitive to electrostatic discharge (ESD). ST proposes multiline solutions in a single package, with various parasitic capacitance and voltage compromises, to address a wide range of industrial communication interfaces as shown below.

ASI interface
Actuator and sensor Interface

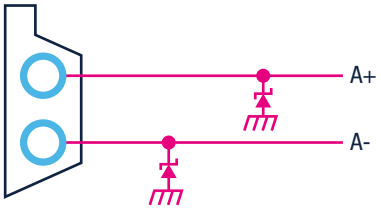

SMA4F33A
ESD with ± 30 kV contact

Seriplex interface

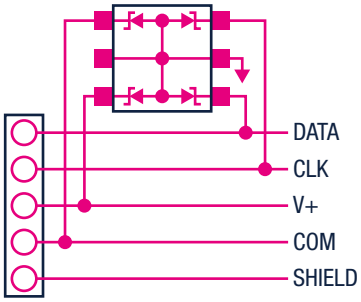

ESDA14/25xx
ESD protection in SOT666/323/23

RS-232 interface
Modbus®

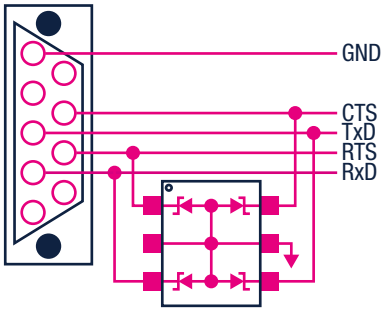

ESDA6V1/14/25xx
ESD protection in SOT666/323/23

RS-422 and RS-485 interface

Modbus®, Modbus Plus™, PROFIBUS®

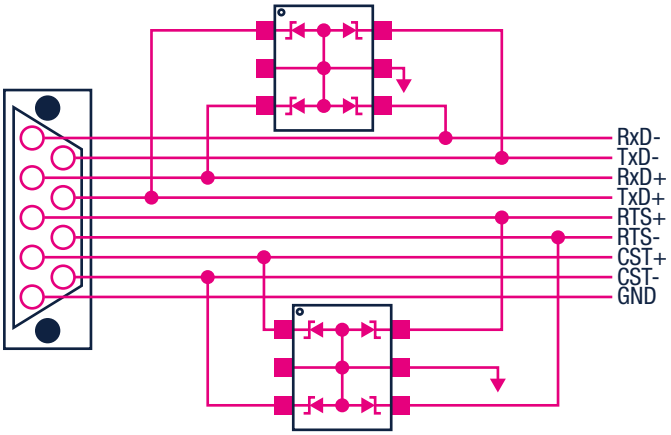

ESDA6V1/14/25xx
ESD protection in SOT666/323/23

CAN interface

CANopen, DeviceNet™

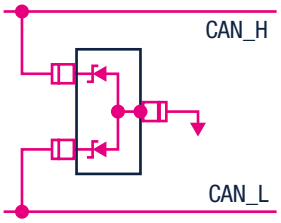

ESDA6V1L/ESDALC6V1
ESD protection in SOT666/23

Dual-line TVS on 24 V field side (PLC, IO module)

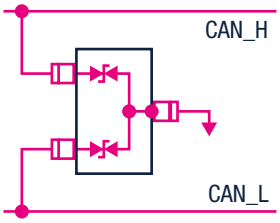

ESDCAN06-2Bxx
ESD protection in SOT23/SOT323

Ethernet protection

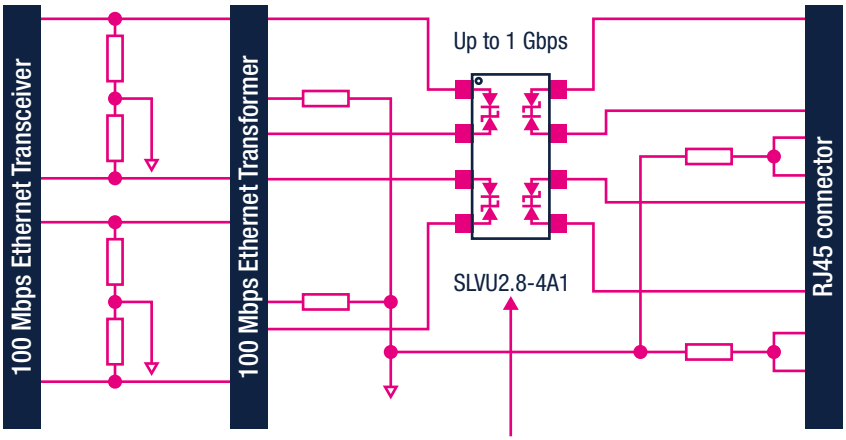

SLVU2.8 or DSL01
3 triple Trisil in one SO8/Transil + Trisil in one package

Example of application USB 2.0 Full speed without OTG

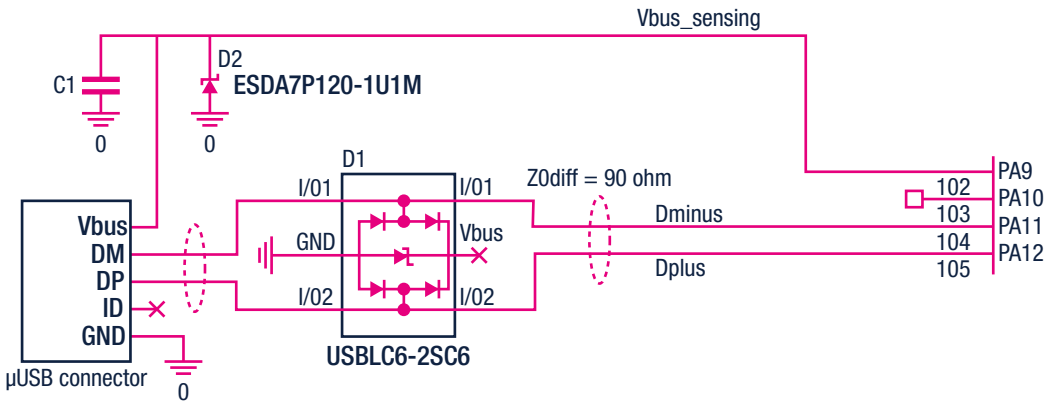

Design tip: Use a Transient Voltage Suppressor (TVS) to protect against 8/20 µs surges on DC power rails.

Featured products

USBLC6-2SC6

- ESD protection in SOT23-6L

SOT23-6L

GET IT ON Google Play

Download on the App Store

Wandoujia

PROXIMITY SENSOR PROTECTION

ST has developed specific and dedicated 200 W (10/1000 µs) multi-line TVS for 2 and 3-wire proximity sensors. The SPT series provides reverse polarity and surge protection in compliance with IEC 61000-4-5, IEC 61131-2 and EN 60947-5-2.

3-wire sensor: SPT01-335DEE

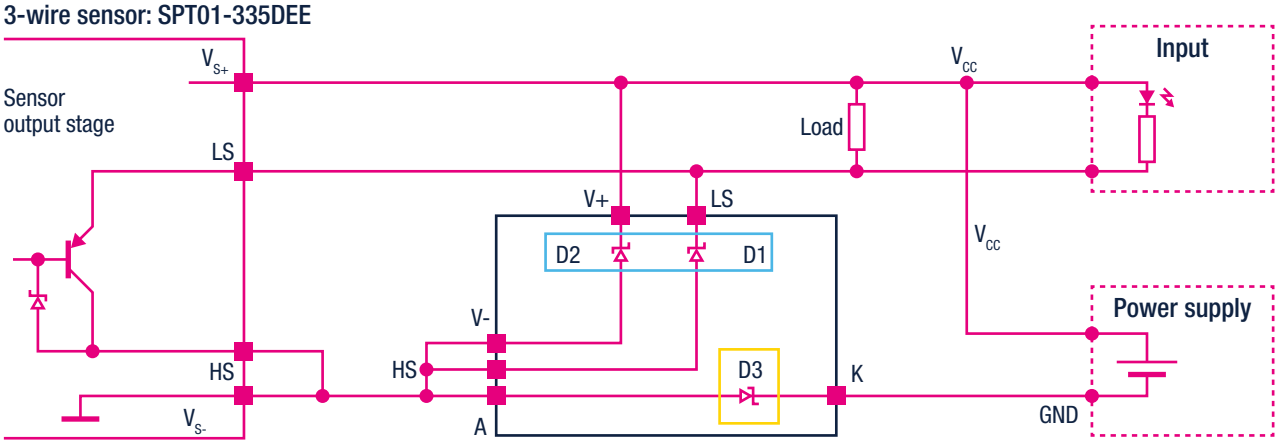

2-wire sensor: SPT02-236DDB

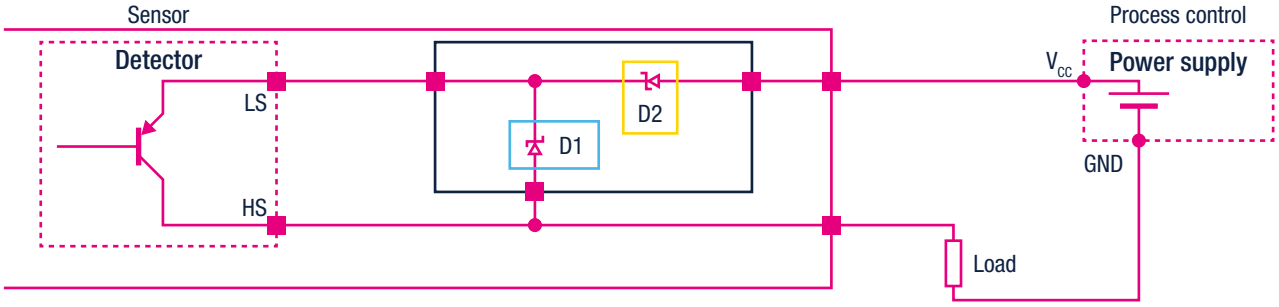

2 features:

- Surge protection
- Reverse battery protection

FACTORY AUTOMATION NEEDS:

- 2-/3-line protection
- 36 V V_{RM} required (even if V_{supply} = 24 V typ)
- V_{CL} @ IPP = 46 V @ 2 A
- Diode specified in forward mode

The SEL-PROT-TVS transient voltage suppressor smart selection tool helps designers select the right TVS for their application with just a few clicks. Only two application parameters are necessary for device selection. The first parameter is the type of protection required, such as automotive, power line, analog or digital line. The second is the signal standard, e.g. CAN, USB, SD-Card, 10/1000 µs or custom.

MPUs AND MCUs

The STM32 family of 32-bit Flash microcontrollers and microprocessors* based on the Arm® Cortex® M and Cortex-A processor is designed to offer new degrees of freedom to MCU users. It offers a 32-bit product range that combines very high performance, real-time capabilities, digital signal processing, and low power, low voltage operation, while maintaining full integration and ease of development.

The unparalleled and large range of STM32 devices, based on an industry-standard core and accompanied by a vast choice of tools and software makes this family of products the ideal choice, both for small projects and for entire platform decisions.

STM32 MCUs 32-bit Arm® Cortex®-M

LONGEVITY 10 YEARS COMMITMENT

High Performance

- **STM32H7** — Up to 3224 CoreMark; Up to 550 MHz - Cortex-M7; 240 MHz - Cortex-M4
- **STM32F2** — 398 CoreMark; 120 MHz Cortex-M3
- **STM32F4** — 608 CoreMark; 180 MHz Cortex-M4
- **STM32F7** — 1082 CoreMark; 216 MHz Cortex-M7

Mainstream

- **STM32G0** — 142 CoreMark; 64 MHz Cortex-M0+
- **STM32F0** — 106 CoreMark; 48 MHz Cortex-M0
- **STM32F1** — 177 CoreMark; 72 MHz Cortex-M3
- **STM32G4** — 550 CoreMark; 170 MHz Cortex-M4
- **STM32F3** — 245 CoreMark; 72 MHz Cortex-M4

Optimized for mixed-signal applications

Ultra-low-power

- **STM32L4+** — 409 CoreMark; 120 MHz Cortex-M4
- **STM32L0** — 756 CoreMark; 32 MHz Cortex-M0+
- **STM32L1** — 93 CoreMark; 32 MHz Cortex-M3
- **STM32L5** — 443 CoreMark; 110 MHz Cortex-M33
- **STM32L4** — 273 CoreMark; 80 MHz Cortex-M4

Wireless

- **STM32WB** — 216 CoreMark; 64 MHz Cortex-M4; 32 MHz Cortex-M0+
- **STM32WL** — 162 CoreMark; 48 MHz Cortex-M4; 48 MHz Cortex-M0+

Cortex-M0+ Radio co-processor

Arm® Cortex® core: -M0 / -M0+ | -M3 | -M33 | -M4 | -M7

STM32 Ecosystem

- STM32Cube
- Evaluation tools
- Software tools
- Embedded Software
- Hardware Tools
- Security — STM32 Trust
- MadeForSTM32 — V1
- ST Partners — Partner Program

STM32 Solutions

- Artificial Neural Networks
- Audio/Voice
- Connectivity
- Digital Power
- Graphic User Interface
- Motor Control
- Safety — Safety Ready
- USB Type-C

STM32 Learning / Communities

- STM32 Community
- STM32 Education
- STM32 MCU Wiki
- STM32 GitHub

* STM32 microprocessors benefit from the proven software, tools and technical support of the STM32 family ecosystem. The release of OpenSTLinux Distribution, a mainlined open-source Linux distribution is a key element of the solution. OpenSTLinux Distribution is reviewed and accepted by the Linux community (Linux Foundation, Yocto project and Linaro) and is pre-integrated with OP-TEE secure OS.

Enhanced STM32Cube tools as well as evaluation boards and discovery kits complete the development suite available to designers.

It leverages a solid scalable software and hardware foundation to simplify and shorten the development time of industry-leading power-constrained applications. Developers are able to seamlessly reuse and migrate IPs from project to project. STM32 MPUs are included in ST's rolling 10-year longevity commitment.

To help developers choose the best solution for their applications, the ST-MCU-FINDER App lets them explore the complete portfolio of STM32 ARM® Cortex®-M and STM8 microcontrollers and development

boards (only on mobile version) from any mobile device or directly from the developer's desktop environment. ST-MCU-FINDER features easy-to-use selection tools, self-maintaining documentation, and connections to MCU communities. Developers find the MCU part number that best fits their application thanks to an easy search with multiple criteria including core type, CPU frequency, memory, price, package, I/Os, temperature grade and peripherals such as control, timers, analog, connectivity, multimedia and security. You can also buy devices online using the ST MCU Finder.

In the desktop version, the development begins immediately after device selection by launching the STM32CubeMX initialization code generator directly from the application. ST-MCU-FINDER connects users with developer communities on popular social platforms such as Facebook, Twitter, the STM32 YouTube channel, and ST Community.

GET IT ON Google Play

Download on the App Store

Complete hardware tools and ecosystem

ST's microcontrollers are supported by a complete range of high-end and low-cost Discovery Kit evaluation tools. They implement the full range of device peripherals and features of each product line. The evaluation tools also come with third-party solutions that use an integrated development environment and in-circuit debugger/programmer featuring the JTAG application interface. Developers who are new to these microcontroller cores and families can also benefit from the range of starter kits that are specially designed to help them evaluate device features and start their own applications.

STM32 Nucleo development boards

The highly affordable STM32 Nucleo boards allow anyone to try out new ideas and to quickly create prototypes with any STM32 MCU. STM32 Nucleo boards can easily be extended with a large number of specialized application hardware add-ons thanks to Arduino Uno Rev3 and ST morpho connectors on Nucleo-144 and Nucleo-64, ST Zio connectors on Nucleo-144, and Arduino Nano connectors on Nucleo-32. Moreover, Nucleo boards integrate an ST-Link debugger/programmer, so there is no need for a separate probe. A comprehensive STM32 software HAL library together with various software examples are provided with STM32 Nucleo boards and work smoothly with a wide range of development environments, allowing to build a complete application in only a few minutes.

STM32 Nucleo development boards can easily be expanded through a variety of add-on boards. These expansion boards open the door to any type of application leveraging the appropriate mix of performance/peripherals/power within the comprehensive STM32 family.

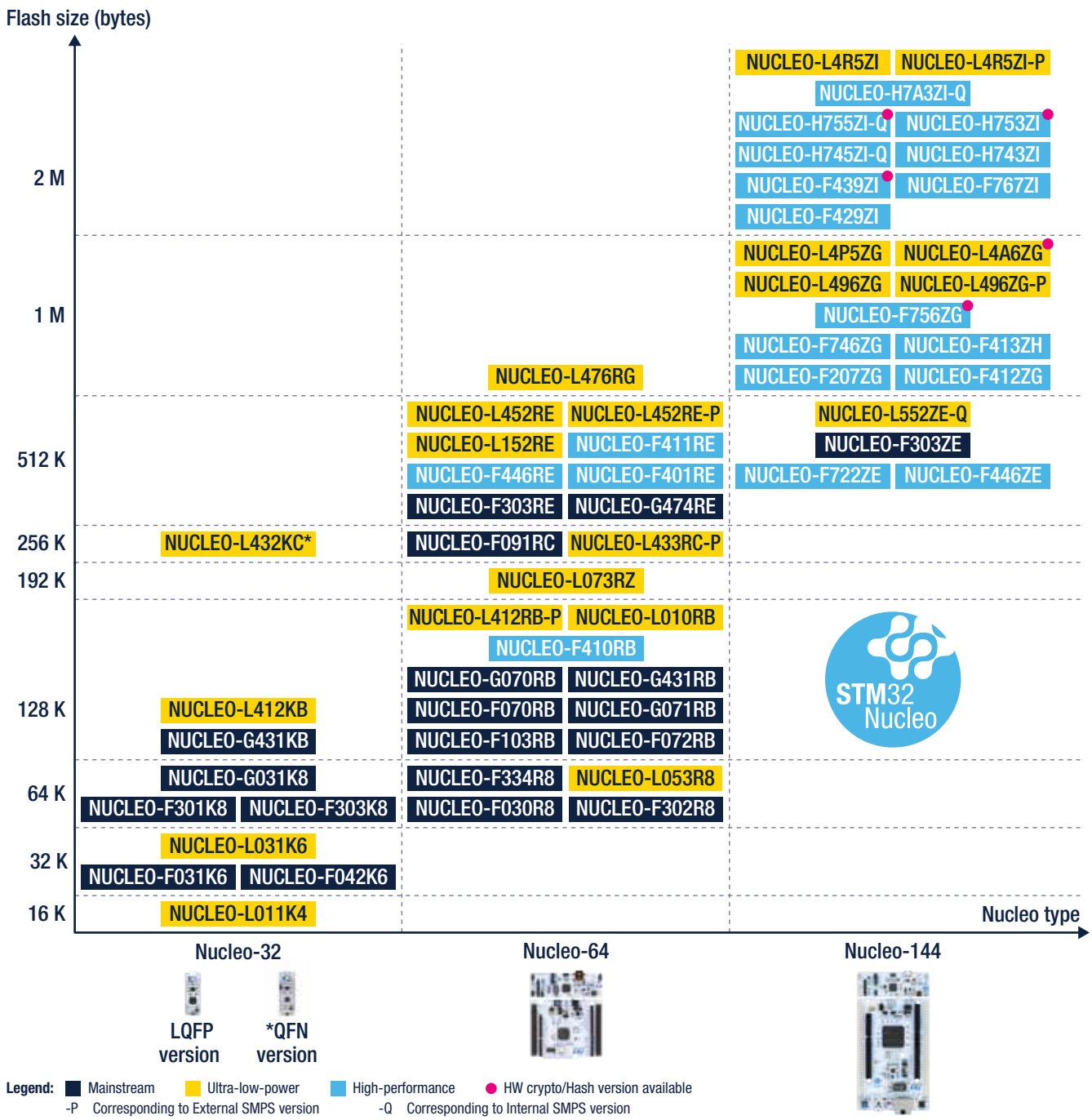

STM32Cube development software

STM32Cube is a set of free development tools and embedded software bricks to enable fast and easy development on the STM32 platform which simplifies and speeds up developers' work.

The embedded software bricks include a Hardware Abstraction Layer (HAL) for easy porting from one STM32 device to another and middleware bricks for the most common functions (such as RTOS, USB, file system, TCP/IP stack, touch sensing or graphics).

A large number of use-case code examples are also included, making it even easier to get started.

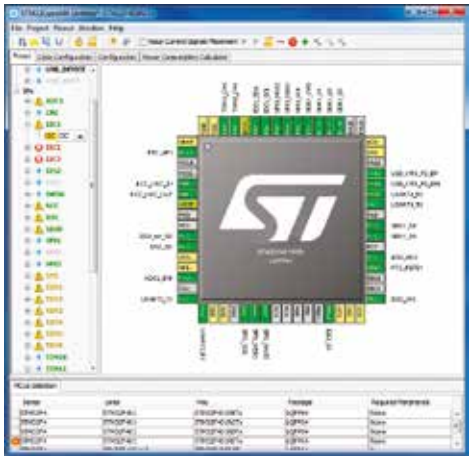

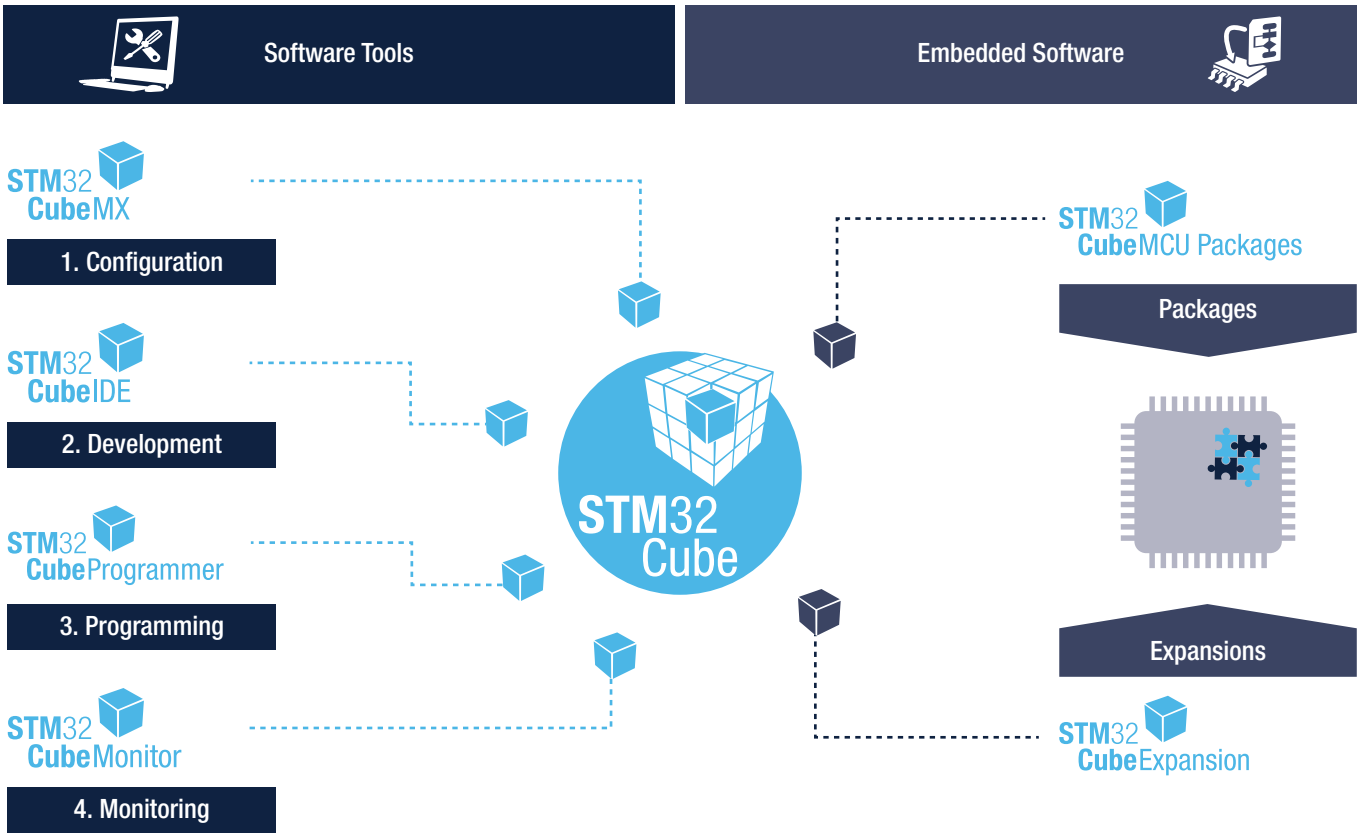

STM8 8-bit MCU family

ST's 8-bit microcontroller platform is implemented around a high-performance 8-bit core and a state-of-the-art set of peripherals. This platform is manufactured using an ST-proprietary 130 nm embedded non-volatile memory technology. It is able to reach 1.6 cycles per instruction and up to 24 MHz clock frequency, allowing customers to run their applications at low speed with high performance.

STM8 8-bit MCUs Core up to 24 MHz

Mainstream	Industrial, consumer and mass market	Robust and reliable Up to 125 °C	STM8**S** Data EEPROM, 3 and 5 V families, precise RC	
Ultra-low-power	Ideal combination of low-power performance and features	High-end analog IPs Active Halt < 1 µA	STM8**L** Data EEPROM, 1.65 and 3 V families, strong analog, LCD drivers, low-leakage technology	
Automotive	Long-term guarantee	AEC-Q100 Up to 150 °C	STM8**AF** Data EEPROM, 3 and 5 V families, precise RC, LIN, CAN, grade 0	ASIL Ready
Automotive	Long-term guarantee	AEC-Q100 Up to 125 °C	STM8**AL** Data EEPROM, 1.65 and 3 V families, strong analog, LCD drivers, low-leakage technology	ASIL Ready

Join the STM8 Community!
http://community.st.com/stm8

STM8 Ecosystem

Software tools

- STM8CubeMX Configuration tool
- Integrated Development Environments (IDE)
- STM Studio Monitoring tool
- ▶ More software tools

Embedded software

- Standard Peripheral Library for STM8L (8 kb)
- Standard Peripheral Library for STM8L/AL (64 kb)
- Standard Peripheral Library for STM8A/S
- ▶ More embedded software

Hardware tools

- STM8 Discovery kits, Nucleo and evaluation boards
- ST-LINK in-circuit debugger/programmer

Safety-certified systems based on STM8 and STM32

ST provides a comprehensive set of free-of-charge and certified Functional Safety packages based on robust built-in STM8 MCU and STM32 MCU and MPU safety features with the aim of significantly reducing the development efforts, time and cost required to meet functional safety standards. Automatically triggered when a risk of harming users is identified, safety mechanisms in software are embedded in many electronic systems present in Industry 4.0, medical, automotive and home electrical appliances and in all new safety-regulated markets such as battery management systems and drones.

STM8 CubeMX — Configure & Generate Code

FREE IDE's, RAISONANCE, IAR SYSTEMS, Z SYSTEM — Compile and Debug IDEs

STVP, STM Studio, ST-Link Utility, MCU Finder — Monitor, Program & Utilities

Several ST Authorized Partners are experts in functional safety and have expanded their know-how to STM8 and STM32 with software, tools, trainings and other services. Their solutions help designers at any stage of their project: from the mapping of safety requirements to the design and validation of hardware and software, certification phase included.

Achieving SIL2/3 with STM32

Package name	X-CUBE-CLASSB	STM8-SafeClassB
STM32 Series covered	V2.2.0 - STM32F0, F1, F2, F4, F7, STM32L0, L1, L4	STM8AF STM8AL STM8L STM8S
Self-test libraries based on	STM32Cube STM32CubeHAL	Optimized direct access to STM8 registers
Supported development environments	IAR Embedded Workbench®, ARM KEIL®, STM32CubeIDE	IAR Embedded Workbench®, Cosmic®
Certification	UL@2017 & 2019	UL & VDE@2018
IEC 60335-1 and 60730-1 international standards coverage	IEC, UL and CSA	
Safety manual (guidelines)	AN4435	AN3181

STM32 for wireless connectivity

Migration to wireless connectivity is supported with the STM32 through the STM32WB and STM32WL product series enabling long-range and short-range technologies.

The STM32WB series is enabling point to point and meshed communication through multi-protocols: Bluetooth Low Energy including the Mesh capability; Zigbee and Thread network. Dual core and large memory capability make it able to endorse general purpose MCU together with wireless connectivity. The ecosystem includes STM32CubeWB with free of charge certified radio stacks and various low-cost PCB integration packages as well as module for a fast and easy time to market.

STM32 Nucleo pack is the most cost-effective way to quickly get started developing STM32WB-based prototypes

A wide collection of packages allows great flexibility at application time.


UQFN48
7 x 7 mm (p: 0.5 mm)


VQFN68
8 x 8 mm (p: 0.4 mm)


WLCSP100
4.39 x 4.37 mm

UFBGA129
7 x 7 mm (p: 0.5 mm) pitch


LGA86
7.3 x 11 mm (p: 0.435 mm)

The following picture summarizes the main features of our STM32WB and STM32WL Series.

STM32 Wireless MCUs
32-bit Arm® Cortex®-M4 and -M0+

STM32WB

- **Transceiver frequency: 2,4 GHz**
- **Open dev. features: HCI, Generic 802.15.4 MAC**
- Arm® Cortex®-M4 at 64 MHz and dedicated M0+ at 32 MHz supporting RF – 80 DMIPS
- From 256-Kbytes to 1 Mbyte of Flash memory
- Consumption:
  - M0+: RX: 4.5 mA, TX 5.2 mA (SMPS, 0dBm)
  - M4: < 50 µA/MHz (RF ON)
- Output power: +6 dBm
- Sensitivity BLE: -96 dBm, 802.15.4: -100 dBm

Note: ** SMPS, 0 dBm

STM32WL

- **Transceiver frequency: 150 to 960 MHz**
- **Open dev. features: LoRa, (G)FSK, (G)MSK, BPSK**
- Arm® Cortex®-M4 and -M0+ at 48 MHz supporting RF – 60 DMIPS
- Flash memory from 64 Kbytes to 256 Kbytes
- Consumption:
  - M4/M0+: < 71 µA/MHz (RF ON)
  - RX: 4,82 mA (SMPS, LoRa 125 kHz)
  - TX 15 mA (SMPS, 10dBm, LoRa)
  - TX 87 mA (SMPS, 20dBm, LoRa)
- Dual Output power:
  - Up to 15 dBm
  - Up to 22 dBm
- Sensitivity LoRa®: -148 dBm

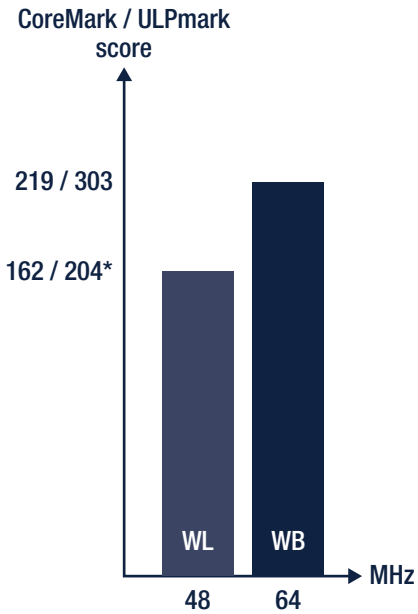

Note: * CoreMark from Flash memory @ 3 V
Pending certification

Complementing the STM32 RF connectivity portfolio, the STM32WL System-On-Chip integrates both a general purpose microcontroller and a sub-GHz radio on the same chip (one single silicon die inside).

Built on Arm® Cortex®-M4 and Cortex®-M0+ cores (single- and dual-core architectures available), STM32WL microcontrollers support multiple modulations– LoRa®, (G)FSK, (G)MSK, BPSK – to ensure flexibility in wireless applications with LoRaWAN®, Sigfox, W-MBUS or any other suitable protocol in a fully open way.

(G)FSK
(G)MSK
BPSK
Multi-modulation

Massive integration
Cost saving

Open dual-core
platform

Ultra-low-power

STM32 Security

256 KB
3.6 V — 73-pin
1.8 V — 48-pin
64 KB Flash
A large offer

End-to-end ecosytem
(advanced RF testing tool,
C code generation tool...)

No matter what!

The STM32CubeWL MCU Package is the best solution for embedded software resources and features HAL and LL peripheral drivers, a full set of middleware and radio stacks (LoRaWAN® and Sigfox) together with various preconfigured software examples for several popular IDEs such as Keil MDK-ARM, STM32CubeIDE and IAR.

The STM32WL55 Nucleo board and STM32Cube Ecosystem form a consistent set of hardware and software development tools to quickly and easily start developing your application.

STM32WL MCU Series
32-bit Arm® Cortex®-M4/-M0+

RADIO
- Multi-modulation Sub-GHz radio
- 2 programmable power outputs
- Sensitivity down to -148 dBm

SECURITY
- AES 128/256-bit
- True Random Number Generator
- Private Key Acceleration
- PCROP/WRP
- 48-/96-bit unique IDs

CONNECTIVITY
- 2x SPI, 3x I²C 1x ULPUART, 2x USART
- 16- and 32- bit timer

ANALOG
- LDO and built-in DC/DC
- 1x ADC 12-bit
- 1x DAC 12-bit
- Temperature sensor

OTHER
- 2x DMA (7 channels)
- 7x Timers (16 and 32 bits)
- 2x ULP Comparators
- ART Accelerator™
- Low voltage 1.8 to 3.6 V

Product line	f_{CPU}	Flash Memory (Kbytes)	RAM (Kbytes)	Modulations: LoRa®	Modulations: (G)FSK	Modulations: (G)MSK	Modulations: BPSK	Radio Frequency Range (MHz)	Dual Power Output	Advanced Security Features	Operating Temperature Range
Cortex®-M4 single-core line											
STM32WLE5	Up to 48	Up to 256	Up to 64	•	•	•	•	150 to 960	1 output up to 22 dBm 1 output up to 15 dBm (consumption-optimized)		-40 to 85 °C (with radio) -40 to 105 °C (without radio)
STM32WLE4					•	•	•				
Cortex®-M4 and -M0+ dual-core line											
STM32WL55	Up to 48	256	64	•	•	•	•	150 to 960	1 output up to 22 dBm 1 output up to 15 dBm (consumption-optimized)	Key Management Services Secure hardware isolation, secure boot, secure firmware update and secure firmware install	-40 to 85 °C (with radio) -40 to 105 °C (without radio)
STM32WL54					•	•	•				

STM32 Ecosystem

- STM32Cube
- Evaluation tools
- Software tools
- Embedded Software
- Hardware tools
- Security — STM32 Trust
- MadeFor STM32
- ST Partners

STM32 Solutions

- Connectivity

STM32 Learning / Communities

- STM32 Community
- STM32 Education
- STM32 MCU Wiki
- STM32 GitHub

STM32Trust

STM32Trust offers a robust multi-level strategy to enhance security in new product designs based on our STM32 microcontrollers and microprocessors augmented with STSAFE secure elements.

STM32Trust is the security framework combining our knowledge, ecosystem and security services. The solution offers a complete toolset for code and execution protection and ensures IP protection, firmware authenticity and secure firmware update, as well as secure data and the use of validated credentials.

STM32Trust brings 12 Security Functions to align with Customer Use Cases and Security Standards.

Code Protection

- X-CUBE-SBSFU software library
- X-CUBE-CRYPTOLIB
- Secure Firmware Install solution
- STM32CubeProgrammer
- STM32HSM-V1
- FASTROM programming services

STM32 Trust

Execution protection

- Debug
- Secure boot
- Memory Protection Unit
- Dual core
- TrustZone
- Firewall

Security function	STM32F4/F7/L1/WB/G0/G4/H7/L0/L4		STM32MP1		STM32L5 WITH TRUSTZONE		+ STSAFE-A/TPM
	Silicon	Firmware	Silicon	Firmware	Silicon	Firmware	Silicon
Secure boot	✓	SBSFU	✓	TF-A	✓	TFM_SBSFU	✓
Secure Install/Update	✓		✓	OPTEE	✓		✓
Secure Storage	(L0/L4/H7/G0/G4)	(WB) SBSFU KMS	✓	OPTEE	✓	TFM SPE	✓
Isolation	✓		✓	OPTEE	✓	TFM	✓
Abnormal situations handling	✓		✓		✓		
Crypto Engine	✓	Crypto libraries	✓	OPTEE	✓	Crypto libraries TFM	✓
Audit/Log					✓	TFM	
Identification/Authentication/Attestation	✓		✓		✓	TFM Attestation	✓
Silicon Device Lifecycle	✓		✓		✓		
Software IP Protection	✓		✓	OPTEE	✓	TFM	
Secure Manufacturing	SFI (H7/L4) with STM32HSM		SSP with STM32HSM		SFI with STM32HSM		✓
Application Lifecycle	✓		✓		✓		✓

Note: * All those solutions are defined at www.st.com/stm32trust

Reference firmware proposed by ST
Firmware to be developed by user

CERTIFICATIONS

ST is fully committed at certifying its solutions by independent recognized authority.

To discover this complete offer, please visit **www.st.com/stm32trust**

Available now

Certifications

ARM PSA
- **Level 1**
  STM32L4
  STM32L5
- **Level 2**
  STM32L5 (TFM)
- **API Compliant**
  STM32L5 (TFM)

COMMON CRITERIA
- **CC EAL5+**
  STSAFE-A110
  STSAFE-TPM

SESIP
- **Level 1**
  STM32L4 (SBSFU)
- **Level 3**
  STM32L4 (SBSFU)

Evaluations

PCI
- **Point of Sale application**
  STM32L4

Cross-layer design for end-to-end security

The STSAFE secure element family ranges from optimized to flexible Java-based and TCG-compliant TPM solutions.

Relying on CC EAL5+ certified chips running an ST-developed secure operating system, our solutions ensure state-of-the-art security for protecting Smart Industry networks and objects against main threats such as device cloning, counterfeiting, data corruption and eavesdropping.

Developers benefit from a comprehensive set of development tools and services:

- Expansion boards compatible with STM32 Nucleo and Arduino boards and kits
- Example code and software libraries to be embedded in the application microcontrollers
- Personalization services for trusted storage of secrets

STSAFE-A

STSAFE-A is an optimized solution providing strong authentication services. Its command set is tailored to address strong authentication compliant with USB-C and QI, establish a secure channel in the scope of a TLS session establishment, verify signatures offer secure storage as well as decrement counters for usage monitoring (it is also compliant to LPWAN LoRa and Sigfox).

Relying on a Common Criteria EAL5+ platform, STSAFE-A is a highly secure authentication solution whose security is certified by independent parties.

Particularly well suited for applications exposed to fraud or counterfeiting, such as consumables like printer cartridges, accessories for phones or gaming, USB Type-C devices, IoT objects running critical credential or operating valuable services, STSAFE-A is the ideal solution for customers wishing to build a secure ecosystem and to focus on their application.

STSAFE-A110 ecosystem contains a complete set of tools for seamless integration:

- ODE STM32 Expansion board (X-NUCLEO-SAFEA1)
- STM32 Cube development ecosystem (X-CUBE-SAFEA1 software package)
- Pre-personalized STSAFE-A110 available for fast evaluation
- Personalization service of customer's certificates and configuration at ST factory with no extra cost

STSAFE-A110 parts and X-NUCLEO-SAFEA1 expansion boards are now available at eDistribution, order your X-NUCLEO-SAFEA1 online at **www.st.com/stsafe-A110**

Learn more at **www.st.com/stsafe-a**

STSAFE-J

STSAFE-J is a flexible solution based on Java Card operating system, which is freely available for customers who plan to run their own applet. STSAFE-J is also available with a generic applet ensuring securing on the host platform: strong authentication, secure connection establishment, usage monitoring and platform integrity.

Based on a Common criteria EAL5+ certified platform, Java 3.0.4 and GP 2.1.1, STSAFE-J100 generic applet allows to cover authentication, secure connection, secure data storage and is provided with personalization service. To ease development, a complete set of tools is available containing expansion board compatible with STM32 Nucleo and Arduino boards as well as example code and libraries to be embedded in the application microcontrollers (PKCS11 software package).

Learn more at **www.st.com/stsafe-j**

STSAFE-TPM

STSAFE-TPM is a widely deployed, standardized solution acting as the corner stone of Personal Computers and Server security. It is a perfect fit for ecosystems built on Windows and Linux operating systems.

Certified by Common Criteria and FIPS 140-2, all STSAFE-TPM products meet security and regulatory requirements. The product portfolio is qualified for consumer, industrial and automotive applications.

It provides a complete set of security features such as measured boot, platform integrity, authentication, secures storage as well as firmware upgrade and cryptographic toolbox.

A full development kit is available for a seamless integration with expansion board (STPM4RasPi) for Raspberry PI® and STM32MP1, Software package with driver and utilities (communication driver and firmware upgrade), Windows and Linux support, TCG Open Source or Third party TPM stacks.

Learn more at **www.st.com/stsafe-tpm**

	STSAFE-A110	STSAFE-J100	STSAFE-TPM
Typical applications	• Consumers/Industrial objects, • USB-C PD3.0 and QI authentication	• Gateways	• Computers • Gateways • Servers
Features	• Authentication (generic, USB-C, QI) • Signature verification • Secure channel establishment with distant server (TLS) • Secure data storage • Decrement counter	• Flexible crypto services (Java Card 3.0.4+ GP 2.1.1 + applet)	• TCG compliant TPM 1.2 & 2.0 • Consumer, Industrial and Automotive Grade
Personalization service at ST	Yes	Yes	Yes
Certification	CC EAL5+ HW	CC EAL5+	CCEAL4+ & TCG1.2 & 2.0, FIPS 140-2
Cryptography	ECC. AES	RSA, AES, ECC, SHA	AES, 3DES, RSA, SHA-1, SHA-256, ECC
Temperature range	–40 ÷ 105 °C	–40 ÷ 105 °C	-40 ÷ 105 °C
Package	SO8N, DFN (2 x 3 mm)	VQFN 32, DFN8 (4 x 4.2 mm)	TSSOP28, VQFN32, TSSOP20, WLCSP
Communication interface	I^2C	I^2C	SPI, I^2C

RTCs, RESET, SUPERVISORS AND WATCHDOG ICs

Widest portfolio of RTC offers unlimited design solutions

In applications where the clock must not drift and correct time must be kept over long periods while unplugged and with minimal battery backup, a standalone real-time clock (RTC) offers significantly higher performance than an embedded RTC in the MCU.

ST offers a wide portfolio of RTC ICs with parallel or serial interface, including ultra-low-power devices and the world's smallest package with embedded crystal.

All ST RTCs are Underwriters Laboratories® (UL) recognized.

ST's SNAPHAT® devices have a special removable/replaceable top that contains a lithium coin-cell battery and a 32-kHz crystal designed to be "snapped on" after the surface mount process.

Sub-families	Part numbers	Key features	Applications
Low-power	M41T6x	Low stand-by current World's smallest RTC with crystal oscillator Small packages	Portable HMI
Enhanced industry standard	M41T81S M41T00S M41T01 M41T80 M41T11 M41T82/83/93	Automatic battery switchover Analog calibration Embedded crystal oscillator	Sub-metering HMI
Highly-integrated	M41ST85W M41T94 M41ST87W	Embedded NVRAM Internal and external RAM clear MCU supervisor functions Tamper detect with timestamp	PLC Local control Servers Data storage Security
Battery with crystal oscillator	M4T28 M4T32	Battery backup power Keyed insertion Removable battery	Sub-metering Portable HMI Local control

Reset and supervisors ICs

ST's portfolio of microprocessor supervisors and reset ICs are designed to keep your application processor under control and your application running. Our product portfolio ranges from basic, single-voltage resets, to smarter resets with a watchdog or early power-fail detection function. We also offer highly integrated devices that include reset, battery switchover and tamper-detect functions. Find out our **STM181x** family of low power Reset circuits on **www.st.com**.

Watchdog ICs

ST offers watchdog timers as standalone devices for applications requiring a high security level. These devices are a robust, reliable means of monitoring software code execution, or hardware failures, and can trigger appropriate action, such as system reboot, high-level interrupt generation and others. Available in compact SOT23 and SC70 packages, watchdog timers can be added to space-conscious applications with minimal impact.

SERIAL EEPROM

STMicroelectronics offers a complete range of Serial EEPROM densities and packages which brings flexibility in smart industry designs.

Industrial grade lines offer robust devices from 1 Kbit to 2 Mbit with I²C, SPI and Microwire serial interfaces. All products feature up to 4 million write/erase cycles per byte, over 100 million cycles per device and 200 years data retention. The wide power supply range 1.7 V to 5.5 V fits any supply available on board.

EEPROM

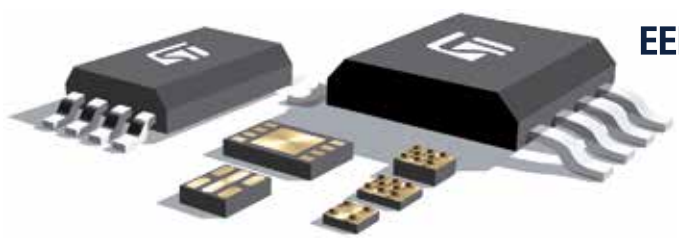

Low power

85 °C at 1.6 V | 105 °C at 1.8 V

4 milliseconds

Up to 4 Mb

4 million cycles

Lockable page

X-NUCLEO-EEPRMA2

Standard I²C and SPI EEPROM memory expansion board based on M24xx and M95xx series for STM32 Nucleo.

SIGNAL CONDITIONING ICs

Operational amplifiers

I ST is a high-volume supplier of both standard and high-performance op amps (www.st.com/opamps):

- Complete 5 V and 16 V CMOS portfolio including precision and power-saving op amps
- Brand new 36 V BiCMOS technology offering:
  - High ratios of performance-to-power consumption
  - Outstanding robustness (ESD tolerance 4 kV HBM)
  - Outstanding stability of performance versus temperature changes
- Space-saving packages such as DFN, QFN, SOT-23 and SC-70

ST Op Amps

5 V CMOS	16 V CMOS
Precision chopper TSZ Nano power TSU	High precision TSX7 High bandwidth TSX9
36 V BiCMOS	**Industrial Standards**
High precision TSB7 Low power TSB6 Rail-to-rail TSB5	LM LMV TL

Op amp series	Main features	Applications
TSB5 TSB6 TSB7	Supply range up to 36 V, from 2.5 to 22 MHz bandwidth, 4 kV ESD	Power applications: 24 V ± 15 V, High-voltage signal conditioning
TSX921 TSX9291 TSX711	Supply range up to 16 V, bandwidth up to 16 MHz, input offset down to 200 µV	Power applications: 12 V ± 5 V, AFE for high-voltage sensors
TSZ18 TSZ12 TSU11 TSU10 TSV63 TSV991	Supply range up to 5.5 V, input offset down to 5 µV, supply current down to 580 nA, bandwidth up to 20 MHz	Low voltage sensor signal conditioning. Interface with microcontrollers.

Comparators

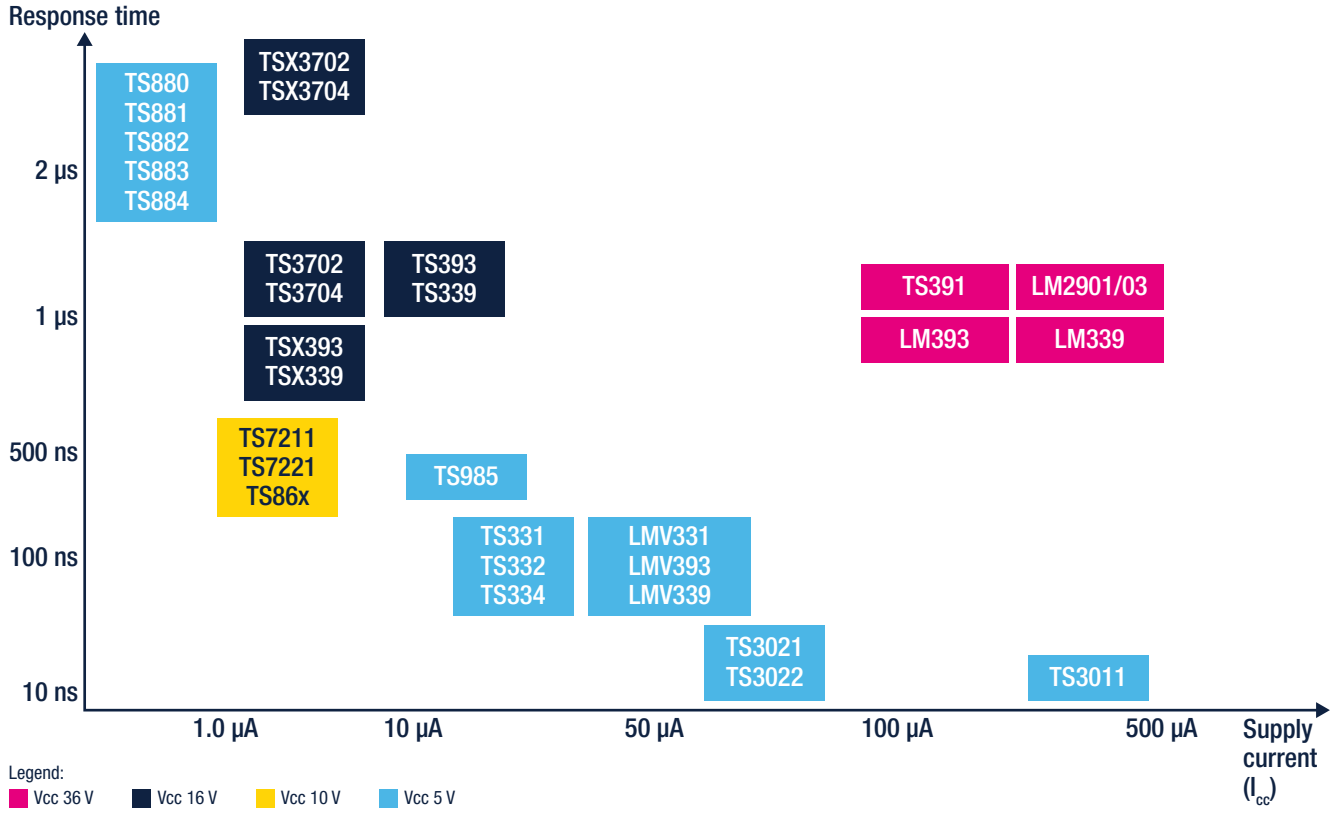

ST is a leading supplier of comparators with a portfolio that offers:

- High-speed comparators with response times as fast as 8 ns
- Micropower comparators with operating currents as low as 210 nA
- High-temperature (150 °C) qualified devices
- Guaranteed specified min/max electrical performance
- Outstanding robustness (ESD tolerance 4 kV HBM)
- Space-saving packages such as DFN, QFN, SOT-23 and SC-70

Comparators series	Main features	Applications
TS880/1/2/3/4	Nanopower Very low voltage	Gas, CO detectors Battery-operated security systems
TS3011	Nano-second response time High efficiency	Optical modules High-frequency systems
TS3021/2		
TSX3702/4	Micropower, 16 V operating High ESD tolerance	Voltage detector Motor control
TSX339/393		

High-side current sensing

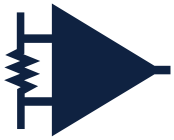

Accurate sensing of currents is central to enhancing application safety. Controlling the current within set boundaries avoids overheating and short circuits.

The main features of our growing high-side current-sense amplifier portfolio are:

- Up to 70 V line monitoring
- Integrated solutions (for example, inclusion of EMI filtering on output) for faster design times and a reduced BOM
- Robust devices that do not require external protection
- Automotive-grade qualified current-sense amplifiers

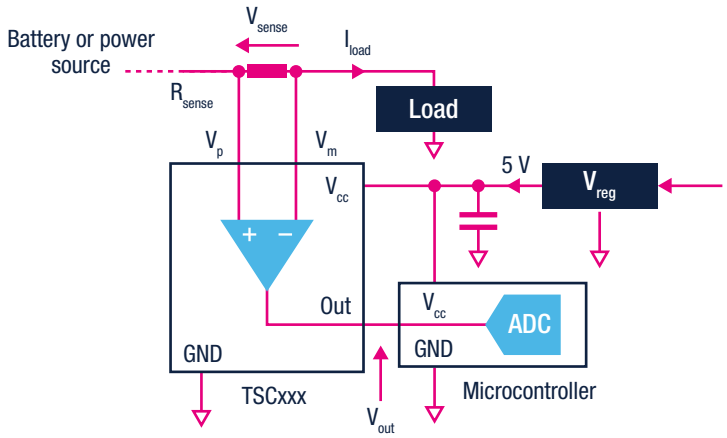

HIGHLIGHT: TSC2011

- Wide common mode voltage: -20 to 70 V
- Offset voltage: ± 200 µV (maximum)
- 2.7 to 5.5 V supply voltage
- Gain: 60 V/V
- Gain error: 0.3% (maximum)
- Offset drift: 5 µV/°C (maximum)
- Gain drift: 10 ppm/°C (maximum)
- Quiescent current: 20 µA in Shutdown mode
- SO8 and Mini-SO8 package

Part number	Max. I_{cc} (µA)	Common mode operating range (V)		V_{cc} (V)		Voltage gain (V/V)	Operatin temperature (°C)	Package
		Min.	Max.	Min.	Max.			
Hide side current sensing								
TSC101	300	2.8	30	4	24	20, 50, 100	-40 ÷ +125	SOT23-5
TSC102	420	2.8	30	3.5	5.5	Adjustable	-40 ÷ +125	TSSOP8, SO8
TSC1021	300	2.8	30	3.5	5.5	20, 50	-40 ÷ +125	TSSOP8
TSC103	360	2.9	70	2.7	5.5	20, 25, 50, 100	-40 ÷ +125	TSSOP8, SO8
TSC1031	360	2.9	70	2.7	5.5	50, 100	-40 ÷ +125	TSSOP8, SO8
TSC2010/2011/2012	1500	-20.0	70	2.7	5.5	20, 60, 100	-40 ÷ +125	MiniSO8, SO8
TSC210/212/213	100	-0.3	36	2.7	26.0	200, 1000, 50	-40 ÷ +125	SC70-6, QFN10

Part number	Description	Documentation
STEVAL-ISQ007V1	High-side current-sense amplifier demonstration board based on TSC101	AN2727
STEVAL-ISQ010V1	High-side current-sense amplifier demonstration board based on TSC102	DB0982
STEVAL-ISQ013V1	Low-side current sensing based on TS507	AN3222
STEVAL-ISQ014V1	Low-side current sensing based on TSZ121	UM1737
STEVAL-AETKT1V2	Evaluation kit for high voltage bidirectional current sense amplifier	DB4277

The ST Op Amps Mobile App

The ST Op Amps app (**ST-OPAMPS-APP**) is a free all-in-one design toolkit and smart selector for smartphones and tablets.

You can select the best product from among our operational amplifier, comparator, current-sensing, power and high-speed amplifiers portfolios for your application.

Sort, compare and filter electrical parameters or use the smart component value calculator with interactive schematics. Search using the competitor cross-reference tool and access 3D package data and product datasheets while away from the desk.

The ST Op Amps App is available on GooglePlay and AppStore **www.st.com/opamps-app**

ANALOG AND DIGITAL INPUT ICs

Modern control systems are highly complex applications. The current trend is to use as many integrated solutions as possible in such designs, either to increase the density or to reduce the physical dimensions of the modules.

Either way results in more stringent requirements regarding the total power dissipation of the module.

Current-limiting termination (CLT) devices form a new series of intelligent protected terminations designed for digital-input modules and proximity-sensor interfaces in industrial and building automation systems. Today's designers face the challenge of increasing the number of IOs per volume unit and increasing the IO interface features.

The CLT series offers highly robust EMC compliant solutions in accordance with:

- Surge IEC 61000-4-5: 1 kV
- ESD IEC 61000-4-2: 15 kV
- EFT burst IEC 61000-4-4: 4 kV

Robustness is also a key parameter for CLT devices, including the CLT01-38S4, which operates with all types of sensors compliant with IEC 61131-2, type 1 and 3, with a 2.35 mA limited current, and type 2, using two inputs per sensor with the correct R_{REF}.

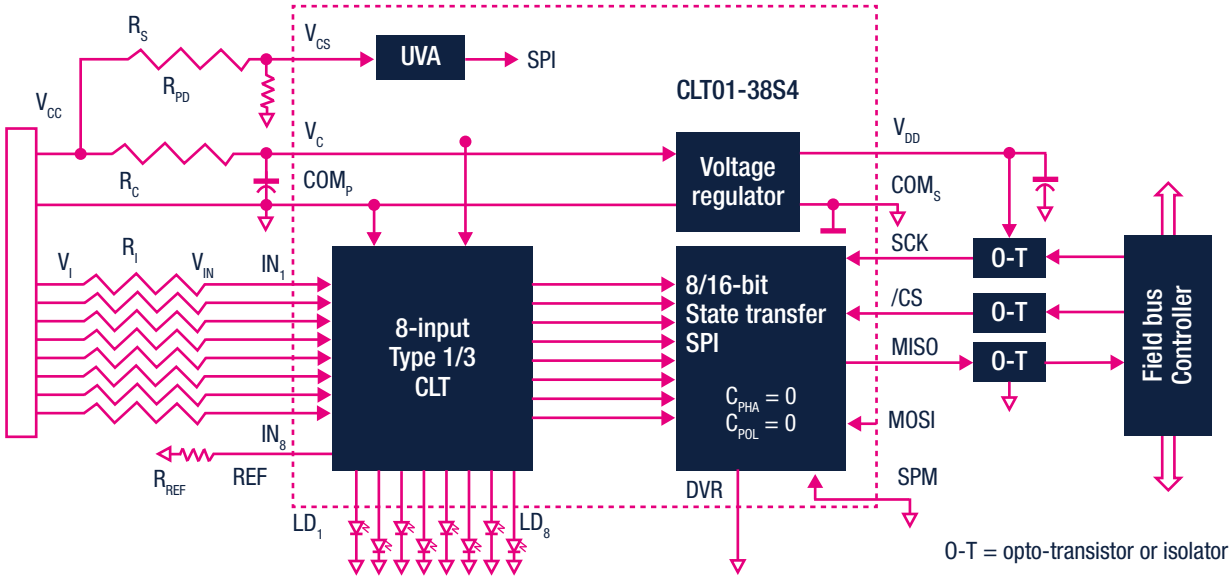

	CLT3-4BT6	PCLT-2AT4	SCLT3-8	CLT01-38	CLT03-2Q3	CLT03-1SC3
Number of inputs	4	2	8	8	2	1
Input IEC 61131-2	Type 1 and 3	Type 1, 2 and 3	Type 1, 2 and 3	Type 1, 2 and 3	Type 1 and 3	Type 1 and 3
Output type	Isolated	Isolated, Non-isolated	Isolated, Non-isolated SPI serialized transfer	Isolated, Non-isolated SPI serialized transfer	Isolated, Non-isolated	Isolated, Non-isolated
Output drive	Opto transistor	Opto transistor, CMOS compatible	Opto transistor, Electromagnetic isolator CMOS compatible	Opto transistor, Electromagnetic isolator, CMOS compatible	Opto transistor, Electromagnetic isolator, CMOS compatible	Opto transistor, Electromagnetic isolator CMOS compatible
Input current limiter	2.8 mA	2.5 to 7.5 mA	2.35 mA	2.35 mA	4 mA	4 mA
Current tolerance	25%	18%	10%	10%	23%	23%
Front-end LED status	Yes, using Type 1	Yes	Yes	Yes	No	No
Surge level	> 1 kV	Type 3: 1 kV Type 2: 0.5 kV	> 1 kV	> 1 kV	> 1 kV	> 1 kV
ESD level	8 kV	15 kV	15 kV	15 kV	2 kV	2 kV
Package	TSSOP-20	TSSOP-14	HTSSOP-38 QFN 7 x 7	HTSSOP-38 QFN 7 x 7	QFN-16L 2 x 4	SOT23-8L
Input datarate	10 kbit/s	10 kbit/s	40 kbit/s	400 kbit/s	70 kbit/s	70 kbit/s
Application note	AN 2527	AN 2482	AN 2846 and AN 3031	AN 4625		
Evaluation board	STEVAL-IFP008V1	STEVAL-IFP004V1	STEVAL-IFP007V1, STEVAL-IFP030V1	STEVAL-IFP023V1, STEVAL-IFP031V1, X-NUCLEO-PLC01A1	STEVAL-IFP035V1	

The X-NUCLEO-PLC01A1 is an industrial input/output STM32 Nucleo expansion board based on the CLT01-38SQ7 and VNI8200XP for STM32 Nucleo. Compatible with the Arduino UNO R3 connector, it can be used as a simple PLC (programmable logic controller) in few steps.

The board is equipped with a set of diagnostic and activity LEDs to facilitate application debugging. The X-NUCLEO-PLC01A1 can be used to rapidly evaluate the ICs on the board performing a basic set of PLC operations in conjunction with the X-CUBE-PLC1 software package.

X-NUCLEO-PLC01A1 is not intended to evaluate single devices at their full specifications. The CLT01-38SQ7 provides protection and isolation in industrial operating conditions as well as an 'energy-less' status indication for each of the eight input channels, featuring minimal power consumption; it is designed for situations that are required to pass the IEC61000-4-2 8 kV and 15 kV test standards.

DIGITAL OUTPUT WITH INTELLIGENT POWER SWITCHES

ST offers a large family of intelligent power switches (IPS) that integrate a control part (logic interface, high-side drivers, and protection) with a power stage. IPS are based on ST-patented technologies, including bipolar, multipower BCD and VIPower M0 technologies. This provides increased system reliability, part count reduction, space saving and built-in protection, as well as smaller IPS devices that are housed in tiny, flat, no-lead plastic packages (DFN, QFN). The high thermal performance of the power packages such as PowerSO-36, PowerSSO24 and PowerSSO12 allows the absorption of high-energy pulses when an inductive load is driven without any external freewheeling diode. As an example, the block diagram above shows one of the pillars of our offering, the VN808, designed using our proprietary VIPower technology.

IPS devices are designed to safely drive every kind of load in low-voltage applications (up to 60 V), and to be compliant with the following international standards:

- IEC 61000-4-4 (electrical fast transient/burst)
- IEC 61000-4-2 (ESD, immunity test contact/air)
- IEC 61000-4-5 (surge test immunity requirements)
- IEC 61000-4-6 (current injection test)
- IEC 61131-2 (programmable controller, equipment requirements and tests)

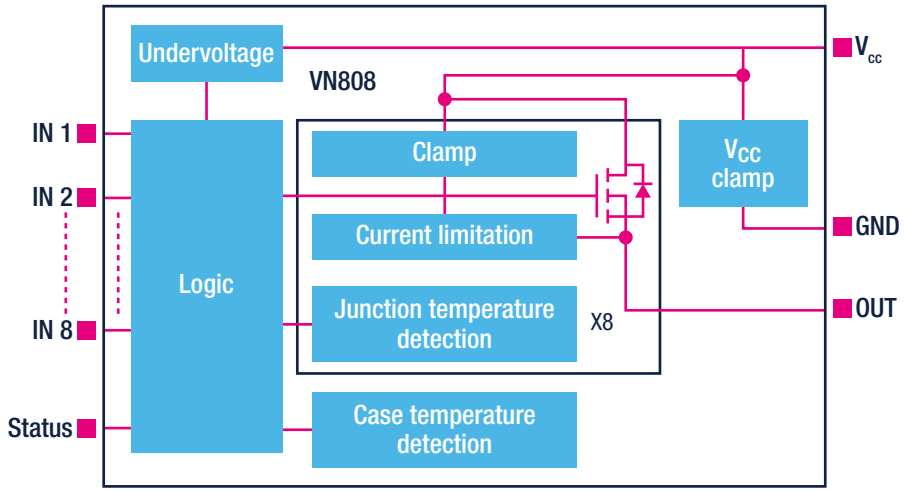

Most popular single-channel IPSs

Part number	V_{CC}	R_{DSON} (Ω) typ.	I_{OUT} (A) nom.	Technology	Package	Channels config.
TDE1737DP	8 ÷ 50	-	0.5/Adjust	Bipolar	DIP-8	Low-side
TDE1747FP	10 ÷ 60	-	0.45/Adjust	Bipolar	SO-14	High-side
TDE1787ADP	6 ÷ 60	-	0.3/Adjust	Bipolar	DIP-8	High-side
TDE1798DP	6 ÷ 50	-	0.5/0.7	Bipolar	DIP-8	High-side
L6375D/S	8 ÷ 50	0.40	0.5/0.75	MultiBCD	SO-20, SO-8	High-side
L6377D	8 ÷ 50	0.40	0.5/Adjust	MultiBCD	SO-14	High-side
VN751PT/S	5.5 ÷ 41	0.060	2/2.5	VIPower	PPAK, SO-8	High-side
IPS160H/HF	8 ÷ 60	0.060	2/2.6	VIPower	PSO12	High-side
IPS161H/HF	8 ÷ 60	0.060	0.5/0.7	VIPower	PSO12	High-side

Most popular multi-channel IPSs

Part number	V_{CC}	R_{DSON} (Ω) typ.	I_{OUT} (A) nom.	Technology	Package	Channels
VNI2140J	9 ÷ 36	0.08	1.0	VIPower	PowerSSO-12	2
L6374	10.8 ÷ 35	4.0	0.1	MultiBCD	SO-20	4
L6376	9.5 ÷ 35	0.64	0.5	MultiBCD	PowerSO-20	4
VNI4140K/-32	10.5 ÷ 36	0.08	0.7/1.0	VIPower	PowerSSO-24	4
VNQ860	5.5 ÷ 36	0.27	0.25	VIPower	SO-20, PowerSO-10	4
VN808/32	10.5 ÷ 36	0.15/0.16	0.7/1.0	VIPower	PowerSO-36	8
VN808CM/32	10.5 ÷ 36	0.15/0.16	0.7/1.0	VIPower	PowerSO-36	8
VNI8200XP/-32	45	0.11	0.7/1.0	VIPower	PowerSSO-36	8
ISO8200BQ	45	0.11	0.7	MultiBCD + VIPower	PowerSSO-36	8
ISO8200BQ/AQ	45	0.11	0.7	MultiBCD + VIPower	QFN 7 x 7 32L	8

As a further example, the VNI8200XP is an octal, high-side smart-power solid-state relay, with a serial/parallel selectable interface on chip (8-/16-bit SPI interface for IC command and control diagnostics). The IC, built using ST's VIPower™ technology, is designed to drive any kind of load with one side connected to ground. Active channel current limitation combined with thermal shutdown, independent for each channel, and automatic restart, protect the device against overload. Additional embedded functions include:

- Loss-of-GND protection that automatically turns off the device outputs should ground be disconnected
- Undervoltage shutdown with hysteresis
- Power good diagnostic for valid supply voltage range recognition
- Output enable function for immediate power output on/off programmable watchdog function for MCU safe operation

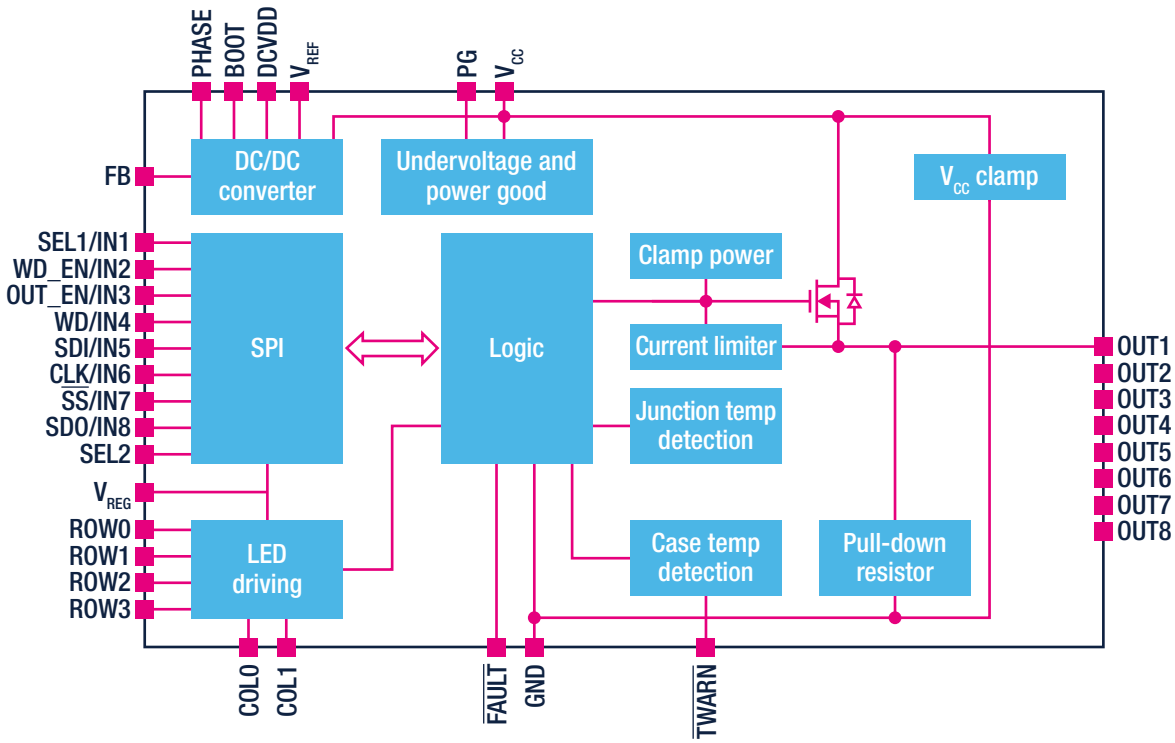

STMicroelectronics has also added new fast-starting devices to its family of intelligent power switches for safety-instrumented systems. With power-on delay time of less than 60 µs, the **IPS160HF** and **IPS161HF** satisfy standardized requirements for interface types C and D in Safety Integrity Level (SIL) Class 3 applications. Featuring a wide operating voltage range of 8 V ÷ 60 V, typical resistance ($R_{DS(on)}$) of 60 mΩ, and 10 µs rise/fall time with 20 µs propagation delay, these devices combine design flexibility, low power dissipation, and fast response. Extended diagnostics facilitate the design of safety-instrumented functions by indicating open load, over-current cut-off, and over-temperature shutdown.

IPS family offers also galvanic isolated products: the **ISO8200B** is a 8-channel driver featuring a very low $R_{DS(on)}$ for the power stage. It contains 2 independent galvanic isolated voltage domains (V_CC for the power stage and V_{DD} for the digital stage).

Other embedded functions are loss-of-GND and loss-of-channel overtemperature protection and case overtemperature protection, undervoltage shutdown with hysteresis, reset function for IC output disable, overvoltage protection (V_{CC} clamping), direct and synchronous control mode, fast demagnetization for inductive loads, and ESD protection. The IC is intended to drive any kind of load with one side connected to ground with 3.3/5 V compatible inputs. Active channel current limitation combined with thermal shutdown (independent for each channel) and automatic restart protect the device against overload and short circuits. In overload conditions, if the junction temperature exceeds the threshold, the channel involved is turned off and then automatically on again after the IC temperature decreases below the reset threshold. If this condition causes the case temperature to reach the threshold limit, TCR, the overloaded channel is turned off and only restarts when the case and junction temperature decrease below the reset thresholds. Non-overloaded channels continue to operate normally. An internal circuit provides an OR-wired unlatched common fault indicator signaling the channel overtemperature. The fault pin is an open-drain active-low fault indication pin. The device is available also with the 7 x 7 mm QFN package, referenced as ISO8200BQ.

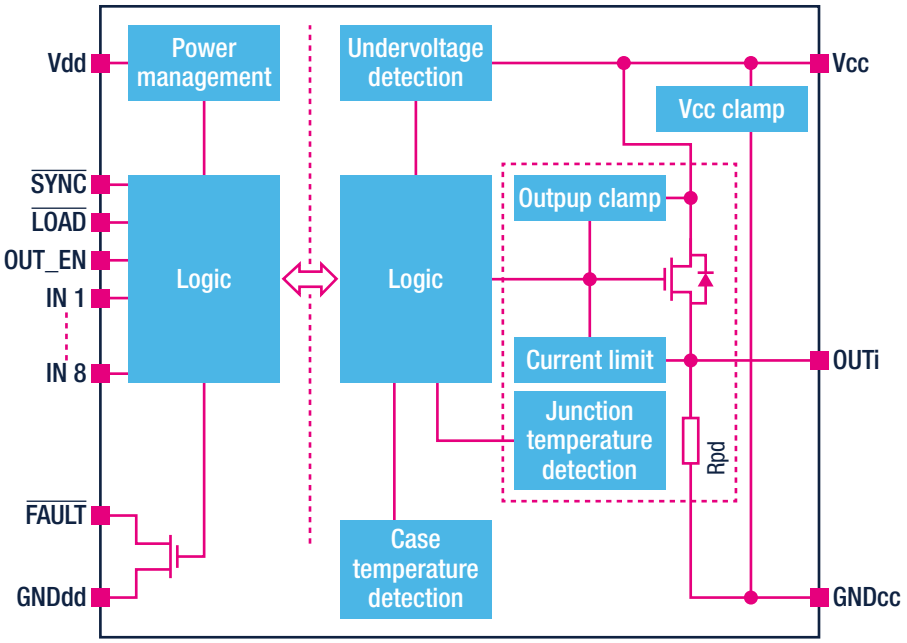

A further option in the IPS Isolated family is the ISO8200AQ that replace the 8 parallel inputs of the ISO8200BQ with a 10 MHz SPI bus. This feature enables diagnostics by channel, accessing internal register. Moreover, an isolated P_{GOOD} pin inform about the status of the process side power supply.

Part number	I_{OUT} (per channel)	Relevant documentation	Evaluation board(s)
TDE1708DFT	0.3	AN2679	STEVAL-IFS006V2
IPS160H	2.5	AN4781	STEVAL-IFP028V1
IPS161H	0.7		STEVAL-IFP034V1
IPS160HF	2.5	UM2715	X-NUCLEO-OUT08A1
IPS161HF	0.7	UM2716	X-NUCLEO-OUT10A1
VN751PT	2.5	DB0862	STEVAL-IFP005V1
VNI2140J	1.0	AN2985	STEVAL-IFP010V3
IPS4260L	1.0		STEVAL-IFP029V1
VNI4140K	0.7	AN2684	STEVAL-IFP006V1
VNI4140K-32	1.0	AN4009	STEVAL-IFP019V1
VN808	0.7	AN2208	STEVAL-IFP002V1
VN808CM	0.7	AN2443	STEVAL-IFP001V1
VNI8200XP	0.7	AN4284	STEVAL-IFP022V1 X-NUCLEO-PLC01A1
VNI8200XP-32	1.0	DB2828	STEVAL-IFP032V1
ISO8200B	0.7	AN4373	STEVAL-IFP015V2
ISO8200BQ	0.7	DS10781	STEVAL-IFP033V1 X-NUCLEO-OUT01A1
ISO8200AQ	0.7	UM2507	X-NUCLEO-OUT02A1

MOTION SENSORS

ST's motion sensor portfolio includes accelerometers, gyroscopes, microphones, digital compasses and inertial modules (**www.st.com/mems**), featuring:

- A high-performance and accuracy, unique sensor portfolio, from discrete to fully-integrated solutions, to meet every design need
- High-volume manufacturing capacity to provide cost-competitive solutions, fast time-to-market and security of supply
- High-performance sensor fusion to further improve the accuracy of multi-axis sensor systems to enable new emerging and highly demanding applications such as indoor navigation, location-based services and industrial controls
- High-level quality products, already tested in different application fields including mobile, portable, gaming, consumer, automotive, healthcare and industrial segments
  - Robotics and automation (accelerometers, gyroscopes)
  - Predictive maintenance
  - Inertial navigation, to increase the accuracy of wheel encoders and self-balancing robots
  - Condition monitoring of industrial equipment and transportation (high-g accelerometers)
  - Asset and parcel tracking and monitoring (high-g accelerometers, gyroscopes)
  - Impact detection and logging
  - Building and structure monitoring (accelerometers)
  - Vibration and tilt monitoring
  - Vibration monitoring
  - Environmental noise-level detection (microphones)
  - Drills (accelerometers, gyroscopes)
  - Tilt detection

Part number	Full scale	Noise density (Typ.)	Package size (mm)	Key features
Accelerometers				
IIS2DH	±2, ±4, ±8, ±16 g	250 µg/√Hz	2 x 2 x 1 LGA-12	Ultra-low-power 3-axis accelerometer with digital output
IIS2DLPC	±2, ±4, ±8, ±16 g	90 µg/√Hz	2 x 2 x 0.7 LGA-12	High-performance, high versatility, ultra-low-power 3-axis accelerometer for industrial applications
IIS2ICLX	±0.5; ±1; ±2; ±3	15 µg/√Hz	5 x 5 x 1.7 LGA-16	High-accuracy, high-resolution, low-power, 2-axis digital inclinometer with embedded machine-learning core
IIS3DHHC[1]	±2.5 g	45 µg/√Hz	5 x 5 x 1.7 LGA-16	High-resolution, high-stability 3-axis digital inclinometer
IIS3DWB	±2; ±4; ±8; ±16	60 µg/√Hz	2.5 x 3 x 0.86 LGA-14	Ultra-wide bandwidth, low-noise, 3-axis digital vibration sensor
iNEMO-Inertial Modules				
ISM330DLC	±2, ±4, ±8, ±16 g ±125, ±250, ±500, ±1000, ±2000 dp	75 µg/√Hz (AXEL) 0.0038 °/s/√Hz (GYRO	2.5 x 3 x 0.83 LGA-14	iNEMO inertial module: 3D accelerometer and 3D gyroscope with digital output for industrial applications
ISM330DHCX	±2, ±4, ±8, ±16 g ±125, ±250, ±500, ±1000, ±2000, ±4000 dps	60 µg/√Hz (AXEL) 0.005 °/s/√Hz (GYRO)	2.5 x 3 x 0.83 LGA-14	iNEMO inertial module with embedded Machine Learning Core: always-on 3D accelerometer and 3D gyroscope with digital output for industrial applications
Magnetometers				
IIS2MDC	±50 gauss	3 mgauss rms	2 x 2 x 0.7 LGA-12	High-accuracy, ultra-low-power, 3-axis digital output magnetometer
Digital compasses				
ISM303DAC	±2, ±4, ±8, ±16 g ±50 gauss	120 µg/√Hz 3 mgauss	2 x 2 x 1 LGA-12	High-performance, low-power, compact 3D accelerometer and 3D magnetometer module

All sensors listed in the above table are included in the 10-year longevity program.
Note: This sensor cannot be evaluated with the X-NUCLEO

ENVIRONMENTAL SENSORS

STMicroelectronics offers a full range of environmental sensors, including pressure, humidity and temperature sensors. These sensors rely on dedicated mechanical structures that optimize performance even in challenging environmental conditions.

Part number	Full scale	Accuracy (Typ.)	Package size (mm)	Key features
Humidity sensor				
HTS221	-40 ÷ 120 ºC	±3.5% rH ±0.5 ºC	2 x 2 x 0.9 HLGA-6L	Capacitive digital sensor for relative humidity and temperature
Pressure sensors				
LPS22CH	-40 ÷ 85 ºC	±1 hPa	2 x 2 x 0.76 HLGA-10L	MEMS Pressure sensor in ST unique fully molded package
LPS22HH	-40 ÷ 85 ºC	±0.5 hPa	2 x 2 x 0.73 HLGA-10L	High-performance MEMS Pressure sensor in ST unique fully molded package
LPS27HHW	-40 ÷ 85 ºC	±0.5 hPa	2.7 x 2.7 x 1.7 CCLGA-10L	Smallest 10Bar water proof pressure sensor
LPS33HW	-40 ÷ 85 ºC	±2.5 hPa	3.3 x 3.3 x 2.9 CCLGA-10L	10Bar Water proof pressure sensor with robust package
LPS33W	-40 ÷ 85 ºC	±3 hPa	3.3 x 3.3 x 2.9 CCLGA-10L	IP6x Water resistant pressure sensor with robust package
Temperature sensors				
STLM20	-55 ÷ 130 ºC	Accuracy: 1.50 ºC max at 25 ºC (±0.5 ºC typ.)	1 x 1.3 x 0.5 UDFN-4L 2 x 2.1 SOT323-5L	Ultra-low current 2.4 V precision analog temperature sensor
STTS22H	-40 ÷ 125 ºC	Accuracy: ±0.5 ºC max -10 ºC to +60 ºC ±1 ºC max -40 ºC to +125 ºC	2 x 2 x0.55 UDFN-6L	Low-voltage, ultra-low-power, 0.5 °C accuracy I²C/SMBus 3.0 temperature sensor
STTS751	-40 ÷ 125 ºC	Accuracy: ±1.5 ºC (max) 0 ºC to +85 ºC ±2.5 ºC max -40 ºC to +125 ºC	2 x 2 x 0.5 UDFN-6L 2.9 x 2.8 SOT323-6L	2.25 V low-voltage local digital temperature sensor

Microphones based on MEMS technology offer excellent audio quality and fidelity. They are less susceptible to mechanical vibrations, temperature variations and electromagnetic interference compared to traditional electret microphones. Their use in industrial domains might be suitable in applications like ambient noise measurements or early detection of faulty equipment condition (pattern detection).

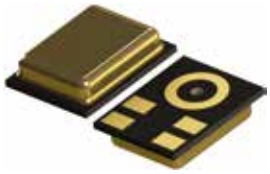

Part number	Port	Package size (mm)	Supply Voltage (V)	SNR (dB)	Sensitivity (dBV)	AOP (dB spl)	Current consumption (µA)	Key features
IMP23ABSU	Bottom	3.5 x 2.65 x 0.98	1.6 to 3.6	64	-38 ± 1	130	120	Single ended Analog Bottom port High performance MEMS microphone. Frequency response up to 80 kHz for ultrasound analysis and predictive maintenance applications
IMP34DT05	Top	4 x 3 x 1	1.6 to 3.6	64	-26 ± 3	122.5	650	Digital (PDM) Top port MEMS microphone with Enhanced ESD protection, High SNR and Acoustic Overload Point

EVALUATION BOARDS FOR SENSORS

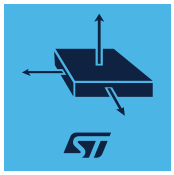

The STEVAL-MKI109V3 is the default evaluation tool with which all ST's sensors can be evaluated and are supported.

Alternatively, the X-NUCLEO-IKS02A1 is an STM32 Nucleo expansion board for inertial and environmental sensor evaluation and software tuning. It is compatible with the Arduino UNO R3 connector layout and is designed around industrial grade devices.

The X-NUCLEO-IKS02A1 interfaces with the STM32 microcontroller via the I²C pin, and it is possible to change the default I²C port.

The ST-SENSOR-FINDER is a mobile application available for Android and iOS, offering a user-friendly alternative to searching through the MEMS and sensors online product portfolio, driving the user along a smooth and simple navigation experience.

X-CUBE-MEMS

The X-CUBE-MEMS1 expansion software package for STM32Cube runs on the STM32 and includes drivers that recognize the sensors and collect temperature, humidity, pressure and motion data.

The expansion is built on STM32Cube software technology to ease portability across different STM32 microcontrollers.

The software comes with a sample implementation of the drivers running on the X-NUCLEO-IKS01A2/X-NUCLEO-IKS01A3/X-NUCLEO-IKS02A1 expansion boards connected to a featured STM32 Nucleo development board.

The software provides sample applications and advanced motion libraries: MotionAC accelerometer calibration, MotionAD airplane detection, MotionAR activity recognition, MotionAT active time, MotionAW activity recognition for wrist, MotionCP real-time carry position, MotionDI dynamic inclinometer, MotionEC real-time e-compass, MotionFA fitness activity, MotionFD real-time fall detection, MotionFX sensor fusion, MotionGC gyroscope calibration, MotionGR real-time gesture recognition, MotionID motion intensity detection, MotionMC magnetometer calibration, MotionPE real-time pose estimation, MotionPM real-time pedometer library, MotionPW real-time pedometer for wrist, MotionSD standing vs sitting desk detection, MotionTL tilt measurement and MotionVC vertical context libraries.

The X-CUBE-MEMS1 is a complete software to build applications using the following sensors:

- Temperature and humidity sensors: HTS221 for X-NUCLEO-IKS01A2 and X-NUCLEO-IKS01A3
- Pressure sensor: LPS22HB for X-NUCLEO-IKS01A2, LPS22HH for X-NUCLEO-IKS01A3, LPS33HW and LPS33K via DIL24 interface
- Temperature sensors: STTS751 for X-NUCLEO-IKS01A3 and STTS22H via DIL24 interface
- Motion sensors: LSM303AGR and LSM6DSL for X-NUCLEO-IKS01A2, LIS2MDL, LIS2DW12 and LSM6DSO for X-NUCLEO-IKS01A3, ISM330DHCX, IIS2DLPC and IIS2MDC for X-NUCLEO-IKS02A1, and ASM330LHH, ISM303DAC, ISM330DLC, LIS2DH12, LSM6DSOX, A3G4250D, AIS2DW12, AIS328DQ, AIS3624DQ, H3LIS331DL, LIS3MDL, LSM6DSR, LSM6DSRX, LSM6DSO32 and IIS2ICLX via DIL24 interface
- Audio sensor: IMP34DT05 for X-NUCLEO-IKS02A1

Compatible with the Unicleo-GUI graphical user interface to display sensor data and configure outputs.

Sample implementation available on the X-NUCLEO-IKS01A2/X-NUCLEO-IKS01A3/X-NUCLEO-IKS02A1 boards connected to a NUCLEO-F401RE, NUCLEO-L152RE, NUCLEO-L476RG or NUCLEO-L073RZ development board.

Advanced motion libraries with sample applications.

Package compatible with STM32CubeMX, can be downloaded from and installed directly into STM32CubeMX.

Easy portability across different MCU families, thanks to STM32Cube and free, user-friendly license terms.

FP-IND-PREDMNT1

F-IND-PREDMNT1 is an STM32Cube function pack including dedicated algorithms for advanced time and frequency domain signal processing and analysis of 3D digital accelerometers with flat bandwidth up to 5 kHz.

The package includes pressure, relative humidity and temperature sensor monitoring, and audio algorithms for acoustic emission (AE), up to 20 kHz, and ultrasound emission analysis up to 80 kHz.

According to the designer's needs for connectivity and sensors, different options are available and selectable by changing parameter settings.

With the NUCLEO-F446RE development board and the STEVAL-STWINKT1B kit with BLE connectivity, you can monitor and log the algorithm output and sensor data using the STBLESensor app.

The STEVAL-BFA001V2B evaluation kit allows connecting a PC via USB to monitor and log the algorithm output, sensor data and equipment status.

By using the STEVAL-STWINKT1B kit with Wi-Fi connectivity, you can connect the device to the dedicated DSH-PREDMNT web-based dashboard to monitor and log the algorithm output, sensor data and equipment status.

The FP-IND-PREDMNT1, together with the suggested combination of STM32 and ST devices, can be used to develop specific industrial predictive maintenance applications for early detection of warning signs of potential failure.

The software runs on the STM32 microcontroller and includes all the necessary drivers for the STM32 Nucleo development board and expansion boards, as well as for the STEVAL-BFA001V2B and STEVAL-STWINKT1B evaluation kits.

Professional MEMS Tool

The Professional MEMS Tool (STEVAL-MKI109V3 “Profi MEMS Tool”) is a motherboard designed to provide a ready-to-use development platform for MEMS devices mounted on adapter boards. It uses an STM32F401VE high-performance ARM Cortex™-M4 microcontroller which functions as a bridge between the sensor on the adapter board and the PC on which it is possible to use the graphical user interface Unico-GUI downloadable from the ST website or dedicated software routines for customized applications.

Join our **MEMS and Sensor community** and participate in **Q&As**.

Our experts are there to help you!

BASIC FEATURES

- Compatible with all ST MEMS adapter boards with digital output
- Controlled by the high-performance STM32F401VET6 ARM Cortex™-M4 microcontroller
- Includes a DIL24 socket for easy MEMS adapter connection
- 3.6 V on-board linear voltage regulator for microcontroller power supply
- DFU compatible for USB microprocessor firmware update
- USB 2.0 full-speed compliant
- Debugging connector for SWD/JTAG
- Connection pins for UART communication (Bluetooth, serial port)
- RoHS compliant

IO-LINK

As explained in the previous section focused on applications, ST offers a number of solutions for IO-Link to help customers quickly and easily prototype and develop their products.

The IO-Link transceivers L6360 (Master side), L6362A and the new L6364 (Device side) enable master and device solutions for IO-Link.

These products feature a wide application spectrum thanks to their voltage range and current handling capabilities, maximum design flexibility, minimum power dissipation, and maximum efficiency. Designed in BCD technology that allows the design of the logic part, and robust low-voltage power MOSFETs in the same chip these ICs offer an efficient, compact and cost-effective way to drive any 3-wire digital sensor.

IO-Link Hub

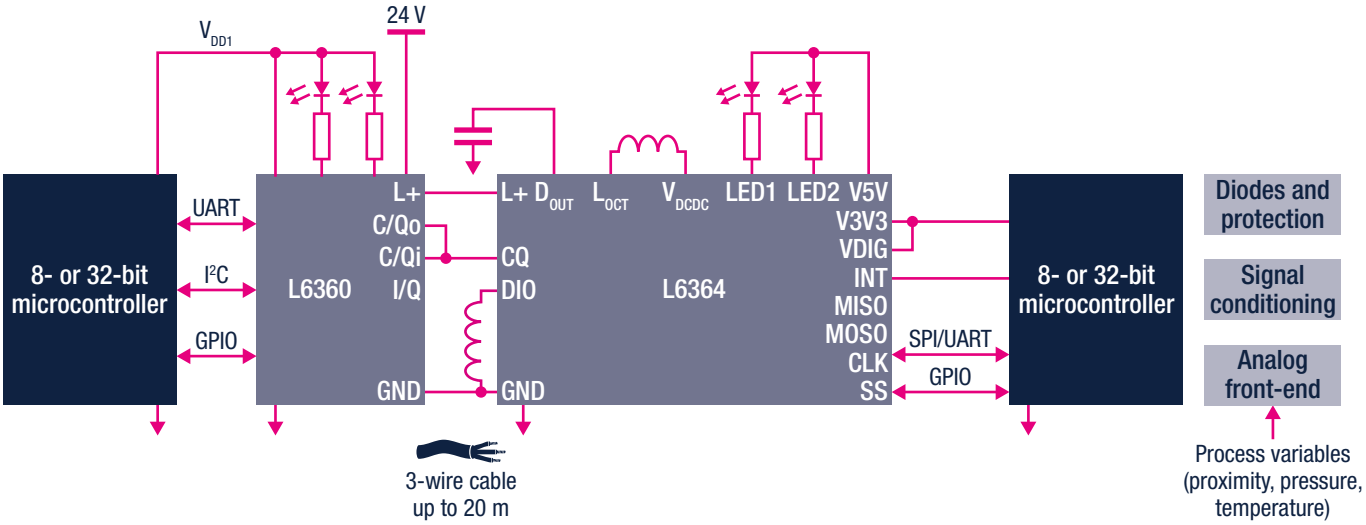

These ICs ensure that IO-Link sensors and actuators can communicate without the need for special cables (standard M5, M8 or M12 cables and connectors can be used). They feature an advanced solution that can be integrated even in legacy systems, that is neutral to any fieldbus, and maintains P2P communication.

Moreover, the ICs are compliant with burst tests, surge tests and ESD immunity tests, based on the IO-Link specification and SIO mode requirements.

Part number	Supply voltage (V)	V_{DD} (V)	Output current (A)	I_{max} linear regulator (mA)	Technology	Output channels	Input channels	Package
L6360 (Master)	18 ÷ 32.5	3.3/5	0.5	65	MultiBCD	2	2	QFN 26L 3.5 x 5 mm
L6362A (Device)	7 ÷ 36	3.3/5	0.22	10	MultiBCD	1	1	DFN 12L 3 x 3 mm
L6364Q/W (Device)	6 ÷ 35	3.3 /5	0.25/0.5 (in join mode)	50	MultiBCD	2	2	QFN 20L 4 x 4 mm CSP 19 2.5 x 2.5 mm

Evaluation boards are available for our L6360, L6362A and L6364 IO industrial transceiver ICs.

Order code	Description	Application Note or User Manual
STEVAL-IDP004V2	IO-Link master multi-port evaluation board based on L6360	AN5041
STEVAL-IOM001V1	IO-Link master evaluation board based on L6360 equipped with ST morpho connectors for STM32 Nucleo	UM2414
STEVAL-IDP003V1	IO-Link industrial modular sensor board based on L6362A	AN5041
STEVAL-IOD003V1	IO-Link (PHY) device evaluation board based on L6362A with Arduino connectors for STM32 Nucleo	UM2424
P-NUCLEO-IOM01M1	STM32 Nucleo pack for IO-Link master based on L6360 device with IO-Link v1.1 (PHY and stack)	UM2421
P-NUCLEO-IOD01A1	STM32 Nucleo pack for IO-Link device based on L6362A device fully compatible with IO-Link v1.1.3 (PHY and stack)	UM2425
X-NUCLEO-IOD02A1	Expansion board IO-Link device based on L6364Q device fully compatible with IO-Link v1.1 (PHY and stack)	UM2741
P-NUCLEO-IOD02A1	STM32 Nucleo pack for IO-Link device based on L6364 device fully compatible with IO-Link v1.1 (PHY and stack)	UM2782
STEVAL-BFA001V2B	Multi-sensor predictive maintenance kit with L6362A and IO-Link stack v.1.1	UM2663

WIRELESS COMMUNICATION

Bluetooth

BlueNRG-1 and BlueNRG-2: Ultra-low-power Bluetooth® Low Energy System-on-Chip

ST's BlueNRG Bluetooth® Low Energy System-on-Chip solutions, are based on 32-bit ARM® Cortex®-M0 and offering unique combination of low power consumption, scalable GPIO pins, with high radio performance, and large integrated memory and come with Bluetooth 5.0 certification. In addition, the latest evolution of the BLE stack adds state-of-the-art security and privacy communication along with a faster data transfer. BlueNRG SoC provide the solution perfectly suited for replacing cable in industrial automation, enabling predictive maintenance applications, and seamless interfacing with sensors for remote monitoring.

Evaluation platforms are available (order code STEVAL-IDB007V2, STEVAL-IDB008V2 and STEVAL-IDB009V1) for enabling evaluation and helping in prototype building.

KEY FEATURES

- State of the art Security and privacy features
- Data length extension for faste data transfer
- Extends battery life
- Robust and reliable RF connections
- A full-featured SDK, including:
  - Templates, examples and iOS/ Android apps
  - High-level abstraction layer APIs (no BLE expertise required)
  - Real-time debug capabilities
  - IAR, Keil, and Atollic support

KEY BENEFITS

- Single-core, ultra-low-power 32-bit ARM® Cortex®-M0
- Up to 256 Kbytes of Flash memory
- 24 Kbytes of ultra-low-leakage RAM (with full data retention)
- Operating temperature range up to +105 °C
- Ultra-low-power, sub-µA power current consumption in Sleep mode
- Ultra-fast sleep-to-active and active-to sleep switching
- Up to +8 dBm maximum output power
- On-chip PDM interface for digital MEMS microphone interfacing
- Embedded battery monitor and temperature sensor
- Integrated DC/DC step-down converter and linear regulator
- On-chip ADC analog front end with 10-bit resolution
- Up to 15 (QFN32) or 26 GPIOs (QFN48 package)
- QFN32 (5 x 5 x 1 pitch 0.5 mm), WLCSP34 (2.69 x 2.56 x 0.5 pitch 0.4 mm), QFN48 (6 x 6 x 1 pitch 0.5 mm) (BlueNRG-2 only)

BlueNRG-2N: Bluetooth® Low Energy network processor

Combining Convenience and Scalability, with Bluetooth® 5.0 Features and Security, the BlueNRG-2N network coprocessor comes pre-programmed, ready for connecting to a host controller to provide Bluetooth connectivity. The latest Bluetooth enhancements featured in BlueNRG-2N include support for Data Length Extension, which accelerates over the air (OTA) firmware updates by as much as 2.5 times and raises data transfers to 700 kbit/s at the application level. Power consumption is lower compared with previous BlueNRG generations, with low transmit and receive current and drawing just 900nA in shutdown mode with the BLE stack running. At the same time, the device maintains robust and reliable radio performance, with +8 dBm programmable RF output power and up to a 96 dB link budget.

KEY FEATURES

- Bluetooth® 5.0 compliant master and slave roles simultaneously
- Multi-master to multi-slave communication guaranteed (2 masters to 6 slaves simultaneously, up to 8 simultaneous connections handled)
- Embedded Bluetooth® Low Energy protocol stack: GAP, GATT, SM, L2CAP, LL and RF-PHY
- On-chip non-volatile upgradable memory
- 6.2 mA Rx current consumption
- 6.8 mA Tx current consumption at -2 dBm
- 96 dB of RF link budget
- Up to +8 dBm available output power (at antenna connector)
- 16- or 32-MHz low-cost crystal oscillator
- 32-kHz crystal oscillator or integrated low frequency ring oscillator
- Operating supply voltage from 1.7 up to 3.6 V
- Available in QFN32 (5 x 5 mm) and WCSP34 (2.66 x 2.56 mm) packages

KEY BENEFITS

- Significantly extends battery life
- Long communication range in real-life environment
- Excellent co-existence performance in crowded 2.4 GHz bandwidth
- Single firmware for supporting master and slave roles
- Easy firmware upgrades in the field to maintain compliance with future releases of the Bluetooth® specification

Bluetooth modules

ST offers Bluetooth low energy modules

BLUETOOTH LOW ENERGY MODULE FEATURES:

- Bluetooth v4.2 compliant network processor module BlueNRG-M0, built around BlueNRG-MS
- Host interface: SPI
- BlueNRG-MS embeds all the Bluetooth Smart 4.2 protocol stack
- Certifications:
  - EU (RED) Type certificate
  - FCC, IC modular approval certification
  - TYPE Japan Certification
  - WPC India Certification
  - BT SIG End Product QDID
- Output power +6 dBm
- Supply voltage from 1.7 to 3.6 V
- Small form factor: 11.5 mm x 13.5 mm

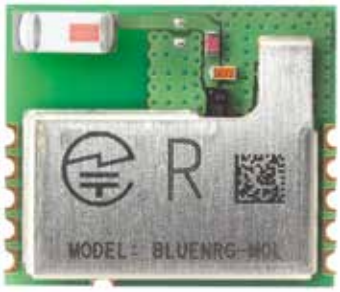

BLUETOOTH LOW ENERGY MODULE FEATURES:

- Bluetooth v5.0 compliant wireless processor module BlueNRG-M2, built around BlueNRG-2
  - High performance, ultra-low power Cortex-M0 32-bit based architecture core
  - Programmable embedded 256 KB Flash
  - 24 KB embedded RAM with data retention
  - Interfaces: 1 x UART, 1 x I^2C, 1xSPI, 14 x GPIO, 2 x multifunction timer, 10-bit ADC, Watchdog & RTC, DMA controller, PDM stream processor, SWD debug Interface
- Max Tx power: + 7 dBm
- Excellent link reliability
- Small form factor: 11.5 mm x 13.5 mm
- Complemented with Bluetooth low energy protocol stack library (GAP, GATT, SM, L2CAP, LL)
- Certifications:
  - EU (RED) Type certificate
  - FCC, IC modular approval certification
  - SRRC China Certification
  - TYPE Japan Certification
  - WPC India Certification
  - BT SIG End Product QDID
- Pre-programmed UART bootloader
- Operating supply voltage: from 1.7 to 3.6 V

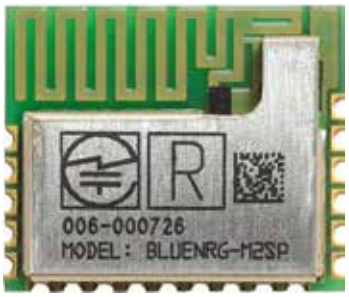

SUB-1GHZ MODULE FEATURES:

- SPI host interface
- Output power up to +11.6 dBm
- Rx: 9 mA, Tx: 21 mA @ +11 dBm
- CE compliant and FCC certified
- Air data rate up to 500 Kbit/s
- Receiver sensitivity: -118 dBm
- Shutdown: 2.5 nA
- Operating temperature: -40 to 85 °C

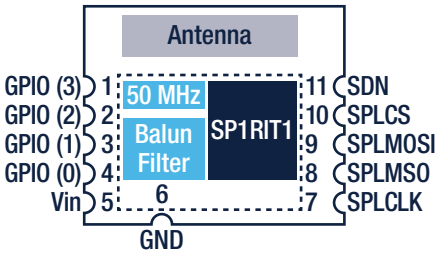

SPSGRF-868 (868 MHz)
SPSGRF-915 (915 MHz)

S2-LP: Ultra-low-power, long range sub-1GHz RF transceiver

The ST ultra-low power sub-1GHz transceiver S2-LP is the ideal solution for allowing smart connected object to operate for up 10 years without replacing batteries, while the receiver sensitivity of -130 dBm enables wide-area coverage.

It supports point-to-point, star, as well as mesh networking topologies thus resulting in a very flexible wireless transceiver perfectly suited for building and factory automation, smart grid, alarm and security, and IoT applications.

Moreover, the S2-LP enables connectivity to the Sigfox global network, which is being rolled out worldwide to provide a reliable cost- and energy-efficient communication solution for billions of sensors.

For fast prototyping and easy evaluation, evaluation platforms are also available covering different ISM Sub-1GHz bandwidth (order code STEVAL-FKI433V2, STEVAL-FKI868V2 and STEVAL-FKI915V1 built around S2-LP transceiver; STEVAL-FKI512V1 built around S2-LPCB transceiver).

SUB-1GHZ

The Industrial, Scientific and Medical (ISM) unlicensed frequency bands below 1 GHz are widely used by wireless communication systems mainly in industrial, home and building automation. The flexibility offered by national regulations in selecting physical layer characteristics such as output transmitted power, modulation scheme, data rate and channel bandwidth, together with the possibility to develop proprietary protocols lets users find the best solution for their needs.

Moreover, either a star or mesh network topology can be implemented and, in principle, without any limitations in the number of nodes connected simultaneously.

Based on sub-1GHz systems, these standards guarantee interoperability between nodes from different manufacturers or system providers, but at the same time achieve high protocol efficiency for the dedicated use case.

Sub-1GHz proprietary solutions are widely used for the wireless connection of nodes in home networks and building automation systems as well as in industrial process applications. Real-time

monitoring and control of thousands of nodes enables process optimization, more efficient resource management, prevents breakdowns and saves energy (Smart Factory).

KEY FEATURES

- Frequency bands:
  413-479 MHz, 826-958 MHz (S2-LP)
  452-527 MHz, 904-1055 MHz (S2-LPCB)
- Modulation schemes:
  - 2(G)FSK, 4(G)FSK
  - OK, ASK
- Air data rate from 0.3 to 500 kbps
- Ultra-low current consumption:
  - 7 mA Rx and
  - 10 mA Tx @ +10 dBm
- Excellent receiver sensitivity down to-130 dBm
- Programmable RF output power up to +16 dBm
- Automatic packet acknowledgment and retransmission
- Embedded timeout protocol engine
- Antenna diversity algorithm
- Fully integrated ultra-low power RC oscillator
- Package: QFN 24 4 x 4 mm

KEY BENEFITS

- Ultra-low-power design for prolonged battery lifetime in applications with sensors in the Smart Industry, Home and Building automation and Smart City
- Built-in support for Sigfox simplifying access to reliable, efficient, and cost-effective IoT connectivity
- Very flexible device supporting multiple protocol and multiple Sub-1GHz bandwidth

Combo-radio IoT node
Dual-Radio turn-key solution application example

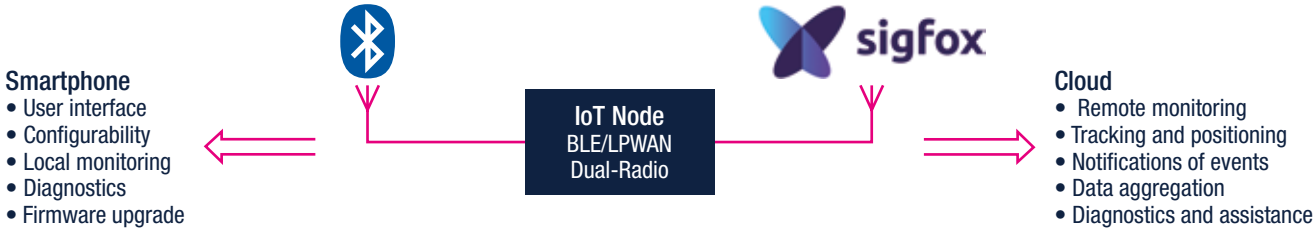

Application scenarios are: wireless sensor nodes, asset trackers, remote diagnostics, finder/tags, smart parking, smart objects.

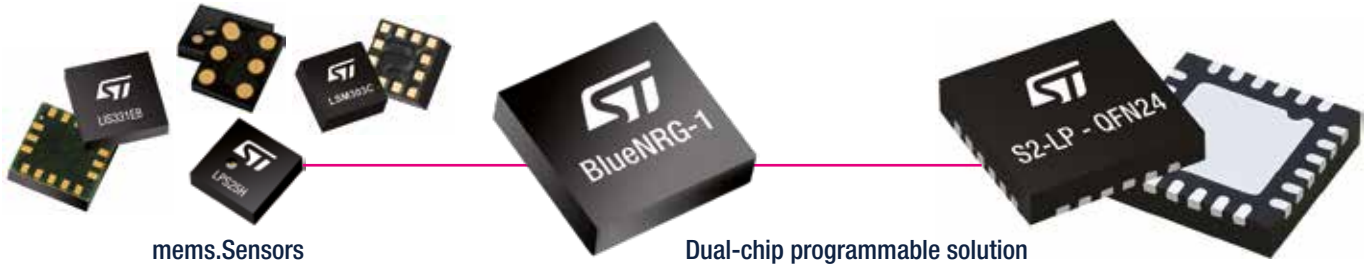

Evaluation tools for connectivity modules		Balun/filter
X-NUCLEO-IDB05A2	STM32 Nucleo Expansion board for BlueNRG-M0 and BlueNRG-M2 modules	BALF-NRG01D3
X-NUCLEO-BNRG2A1		
X-NUCLEO-IDS01A5 (4)	STM32 Nucleo Expansion board and USB dongle for SPSGRF modules	BALF-SPI01D3
STEVAL-IDS01V5M (4M)		

CONTACTLESS

Contactless technology in the smart industry domain is mostly about object tracking and recognition as well as granting people access or even configuring boxed electronic product along the production line.

NFC/RFID Tags, Dynamic Tags & Readers

ST offers a comprehensive portfolio of NFC/RFID products, which operate at 13.56 MHz frequency and are based on NFC and ISO standards:

- NFC/RFID Tags, ideal for wireless pairing (Bluetooth or W i-Fi) and product identification, feature counters, data protection (password) and able to wake-up the Host chip thanks to a General Purpose Output
- Dynamic NFC tags, featuring a reliable EEPROM memory with data protection (password), an I2C interface to connect to a MCU and a RFID/NFC tag interface, enabling multiple use cases for Industrial, Factory Automation, Consumer and IoT.
- NFC/RFID Readers, which support multiple NFC protocols in Reader/Writer, Card Emulation or Peer-to-peer modes, accessed by SPI interface and able to cope with the most challenging environment thanks to High RF performances and advanced features

ST also offers a large range of discovery kits, Nucleo shields, reference software and documentations in order to ease the design process.

KEY FEATURES

- Best-in-class RF performances
- HF 13.56 MHz frequency
- High reliable EEPROM with data protection
- I²C/SPI serial interface
- Energy harvesting capabilities
- Fast Transfer Mode
- Extended Temperature Range
- Tamper detection feature
- 10-year longevity commitment
- Automatic Antenna Tuning
- High and Dynamic Power Output

Part number	Mode	Protocol	Serial interface	Key features	Package
ST25R3911B **ST25R3912** **ST25R3913**	Reader/Writer P2P	ISO14443A/B ISO15693, FeliCa	SPI	Automatic Antenna Tuning, Dynamic Power Output (up to 1.4 W), Very High Baud Rate 6.8 Mbps, Capacitive and Inductive wake-up	QFN32 (5 x 5 mm)
ST25R3916 **ST25R3917**	Reader/Writer Card Emulation P2p	ISO14443A/B ISO15693, FeliCa	SPI I²C	Automatic Antenna Tuning, Dynamic Power Output (up to 1.6 W) Noise Suppressor Receiver, Active Wave Shaping, Capacitive & Inductive wake-up	QFN32 (5 x 5 mm) WLCSP
ST25R95	Reader/Writer Card Emulation	ISO14443A/B ISO15693, FeliCa	SPI	Power Output (up to 0.23 W) Inductive wake-up	QFN32 (5 x 5 mm)
ST25DV-I2C	Dynamic Tag	ISO15693	I²C	EEPROM 4 kb, 16 kb & 64 kb, Fast Transfer Mode (256 B buffer), 64-bit password, Energy Harvesting, GPO MCU wake-up, Up to 105/125 °C operation, NFC Forum Certified	SO8, TSSOP8, FPN8, FPN12, WLCSP
M24SR	Dynamic Tag	ISO14443A	I²C	EEPROM 4 kb, 16 kb & 64 kb, 128-bit password, GPO MCU wake-up	SO8, TSSOP8, FPN8, Die
ST25TA	Tag	ISO14443A	Not applicable	EEPROM 512 b, 2 kb, 16 kb & 64 kb, 128-bit password, 20-bit Counter, GPO MCU wake-up, NFC Forum Certified	Die, FPN5
ST25TV	Tag	ISO15693	Not applicable	EEPROM 512 b, 2 kb & 64 kb, 64-bit password, Tamper Detect loop, 20-bit Counter, GPO MCU wake-up, NFC Forum Certified	Die, FPN5

X-NUCLEO-NFC06A1
ST25R3916 based NFC/RFID Reader
Nucleo expansion board

X-NUCLEO-NFC04A1
ST25DV-I2C based Dynamic NFC tag
Nucleo expansion board

ST25DV-DISCOVERY
ST25DV-I2C based Dynamic NFC tag
Evaluation board

ST25R3916-DISCO
ST25R3916 based NFC/RFID Reader
Evaluation board

60-GHz Short-Range RF Transceivers

The **ST60** 60 GHz RF Transceiver provides a very power-efficient and high data rate wireless link enabling freedom from physical cables and connectors for short range (few centimeters) point-to-point communications.

ST60 offers best-in-class wireless performance with **transfer speeds up to 6 Gbps** along with **very low power consumption**.

ST60's unmatched efficiency, very small form factor and innovative architecture design for optimized system bill of material, make it ideally suited for a wide range of applications in personal electronics, industrial and computer & peripherals.

Eliminate cables and connectors with our innovative ST60 solution. This tiny, optimized, high-datarate wireless link transceiver is a breakthrough for short-range, point-to-point communications:

- Board-to-board contactless connections
  - To remove flex cables in electronics devices
  - To remove cables in Industrial electronic systems that move or undergo mechanical stress due to flexing and bending
- Connector-free solutions
  - For water and dust proof connector-free devices
  - For seamless docking and on-the-go device-to-device data sync
  - For harsh environments to avoid exposing internal electronics to environmental stress through connector ports
- Contactless connectors solutions for Industrial applications

life.augmented

MIX
Paper from responsible sources
FSC® C003379
www.fsc.org

Order code: BRSI0421

For more information on ST products and solutions, visit www.st.com

life.augmented